THE WELDING PROCEDURE QUALIFICATION TEST RECORD AND WELDING PROCEDURE SPECIFICATION FOR THIS WELD SHALL BE PREPARED IN ACCORDANCE WITH AWSD.1-89 AND SUBMITTED TO THE STRUCTURAL ENGINEER FOR REVIEW AND SUBMITTAL TO THE DSA. TYPICAL DETAILS 1/S4, 2/S4 AND 3A/S4. ALL WELDS USED IN PRIMARY MEMBERS AND CONNECTIONS IN THE LATERAL FORCE- RESISTING SYSTEMS SHALL BE MADE WITH A FILLER METAL THAT HAS A MINIMUM CHARPY V-NOTCH TOUGHNESS OF 20 FT-LBS AT MINUS 20 DEGREES F, AS DETERMINED BY AWS CLASSIFICATION OR MANUFACTURER CERTIFICATION.

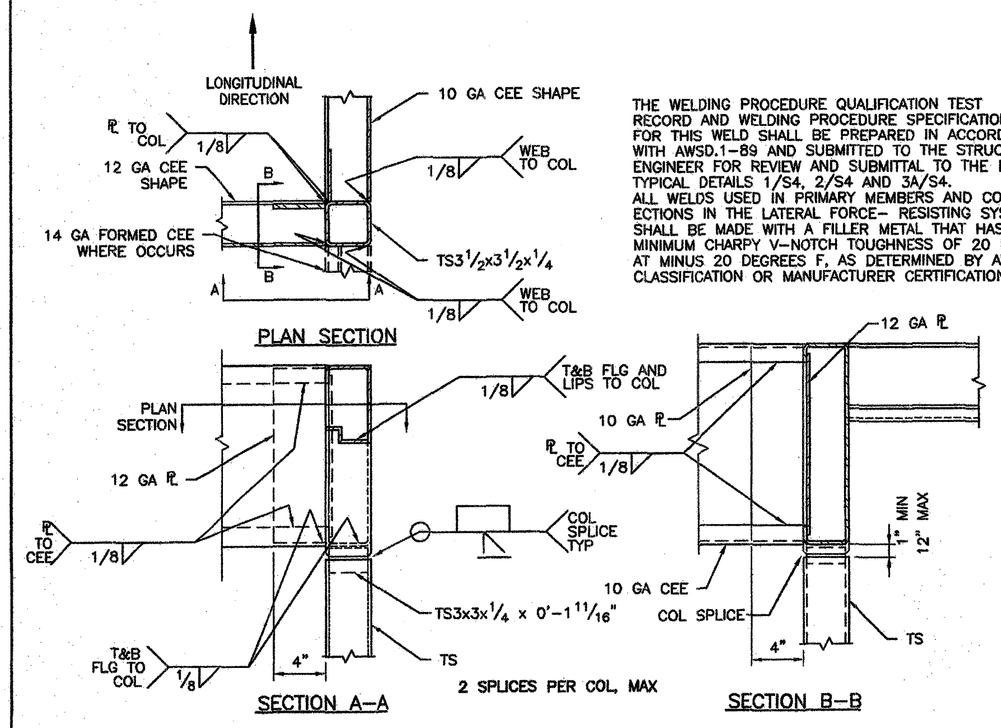

TOP CONNECTION
DETAIL
1/S4 — 1 1/2" = 1'-0"

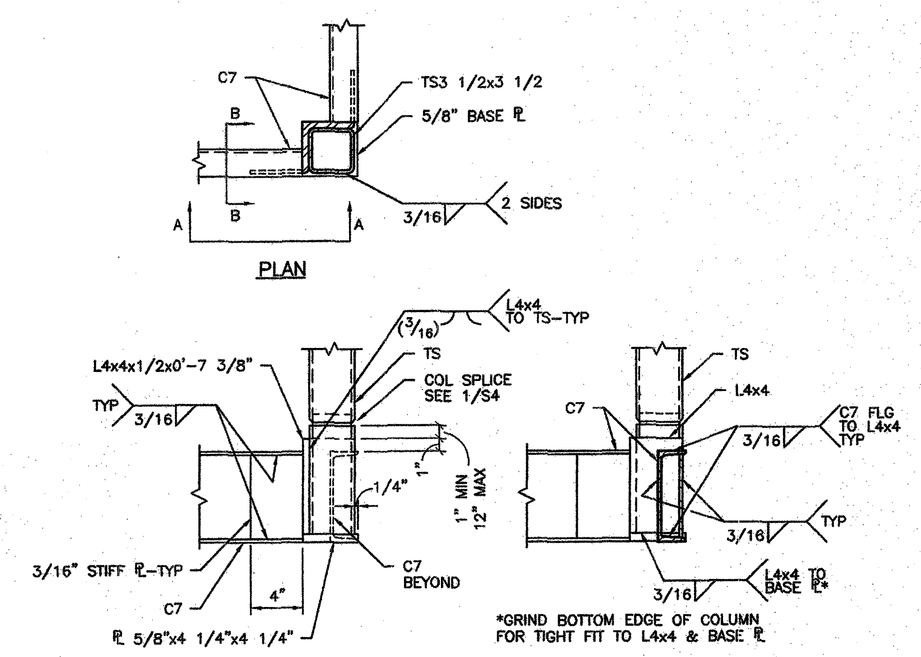

BOTTOM CONNECTION
DETAIL
2/S4 — 1 1/2" = 1'-0"

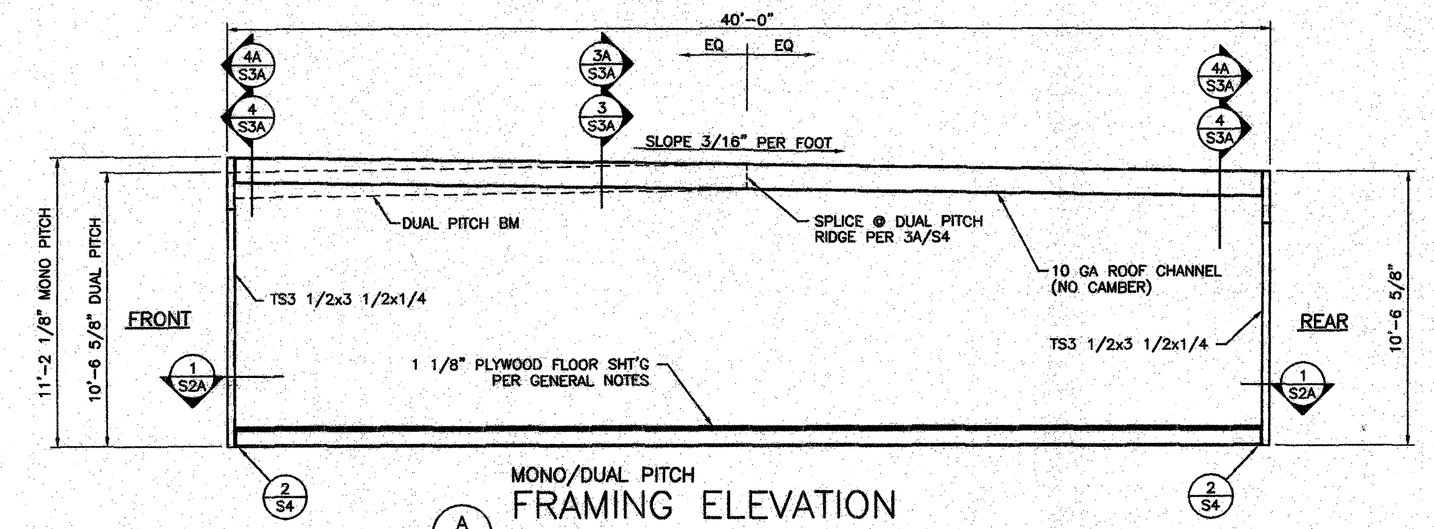

MONO/DUAL PITCH
FRAMING ELEVATION
A/S4 — 1/4"=1'-0"

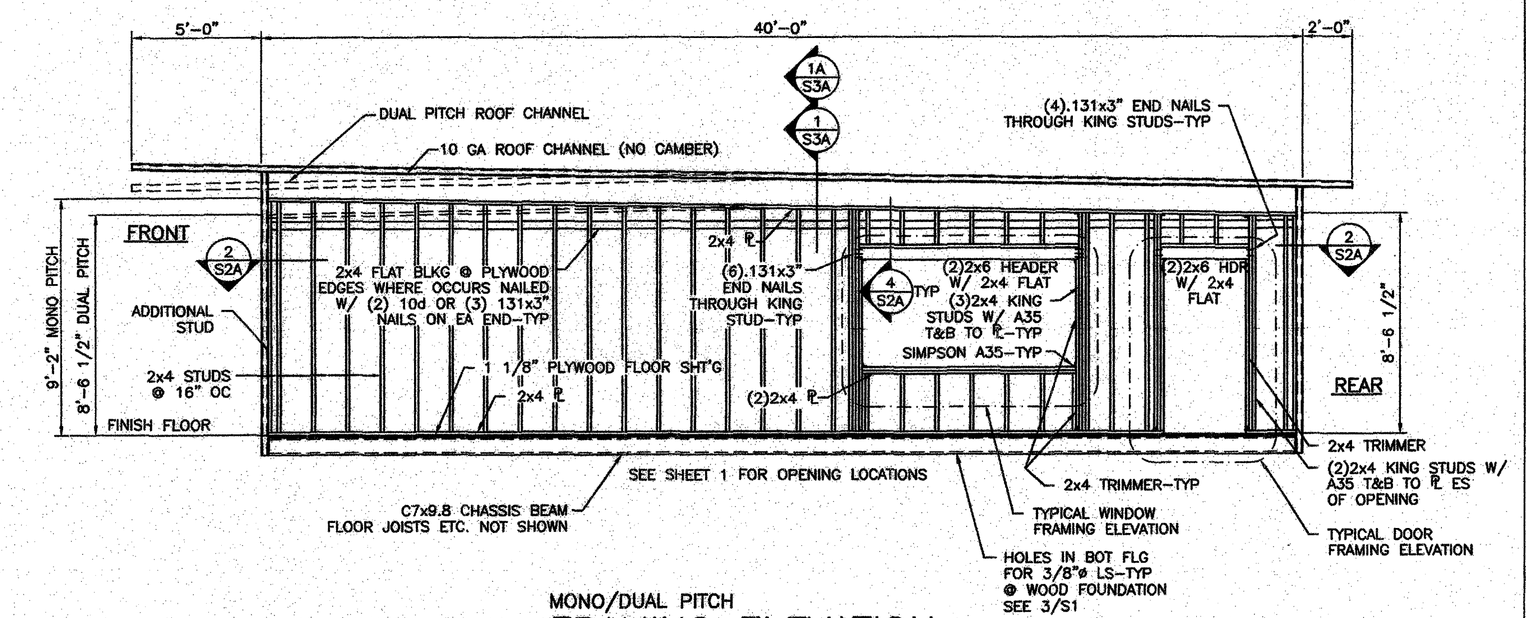

MONO/DUAL PITCH
FRAMING ELEVATION
B/S4 — 1/4" = 1'-0"

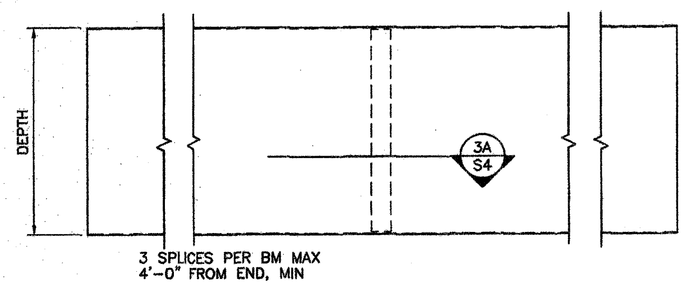

OPTIONAL BEAM SPLICE LOCATION
DETAIL
3/S4 — NO SCALE

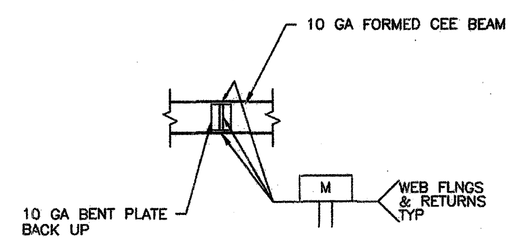

BEAM SPLICE
DETAIL
3A/S4 — 1 1/2" = 1'-0"

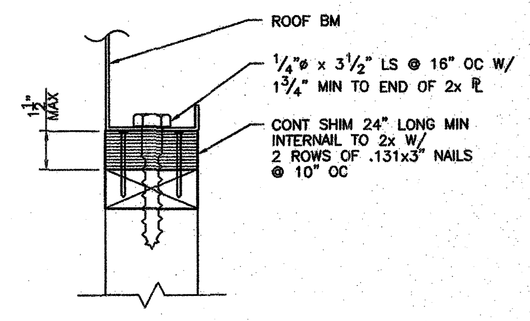

OPTIONAL SHIM @ SIDEWALL/ ENDWALL SIM
DETAIL
4/S4 — 1 1/2" = 1'-0"

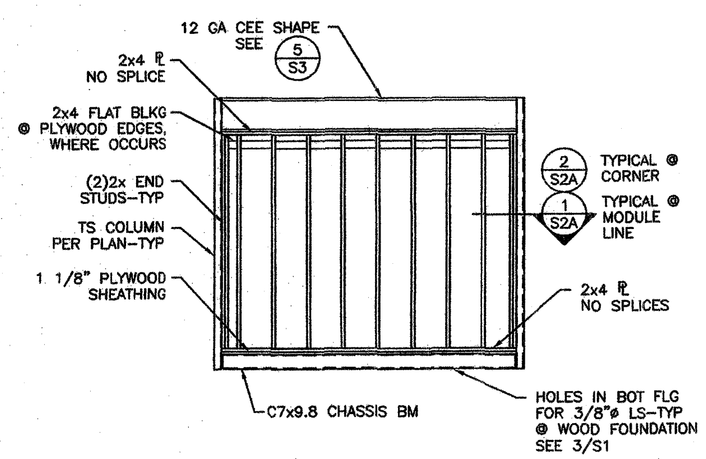

SOLID END WALL ELEVATION
C/S4 — 1/4" = 1'-0"

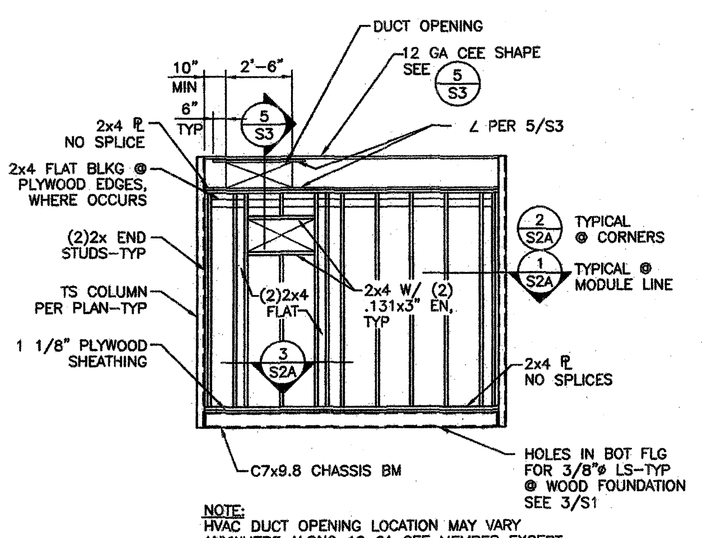

NOTE:
HVAC DUCT OPENING LOCATION MAY VARY ANYWHERE ALONG 12 GA CEE MEMBER EXCEPT AS SHOWN ABOVE

SEE SHEET 1 FOR OPENING LOCATION
HVAC END WALL ELEVATION
D/S4 — 1/4" = 1'-0"

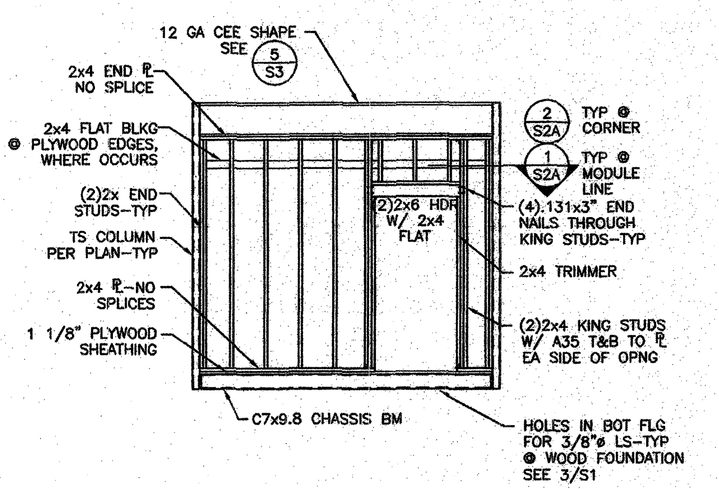

SEE SHEET 1 FOR OPENING LOCATION
DOOR END WALL ELEVATION
E/S4 — 1/4" = 1'-0"

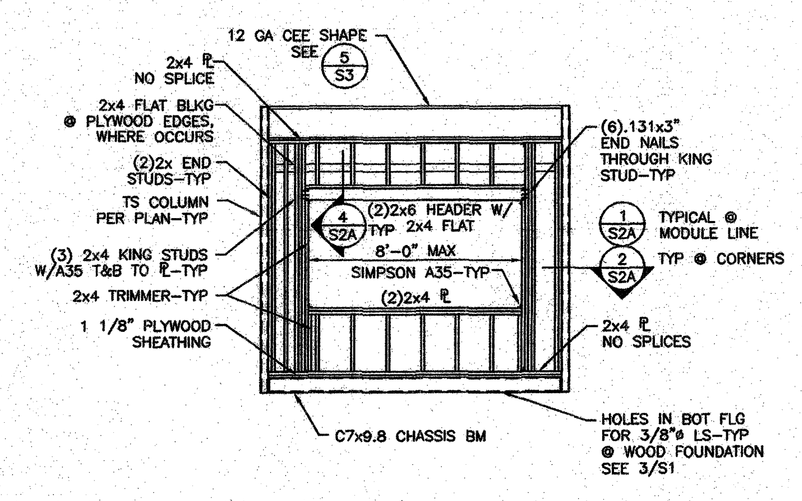

SEE SHEET 1 FOR OPENING LOCATION
WINDOW END WALL ELEVATION
F/S4 — 1/2" = 1'-0"

IDENTIFICATION STAMP
DIV. OF THE STATE ARCHITECT
APP03 110694
AC ___ FLS ___ SS ___
DATE JUN 05 2007

LICENSED ARCHITECT PATRICK CHANGH No. C 12631 Ren. 2-31-05 STATE OF CALIFORNIA

FILE NO. PC

IDENTIFICATION STAMP
DIV. OF THE STATE ARCHITECT
OFFICE OF REGULATION SERVICES
APPLICATION NO. 02-104925
AC ___ FLS ___ SS ___
DATE JUL 31 2003

36 x 40
RELOCATABLE
CLASSROOM

American Modular Systems Inc.
787 Sprecklels Ave. Manteca, CA 95336
(209)825-1921 Fax (209)825-7018
americanmodular.com

REGISTERED PROFESSIONAL ENGINEER Kenneth A. Luttrell No. 1418 EXP. 3-31-05 Structural Engineer STATE OF CALIFORNIA

CUSTOMER:

WALL FRAMING ELEVATIONS AND FRAME DETAILS

DATE:	5/30/03
SCALE:	AS NOTED
DRAWN BY:	REM
DESIGNED BY:	MDB
CHECKED BY:	KAL
SERIAL NO.	

REVISIONS

NO	DATE	DESCRIPTION	NO	DATE	DESCRIPTION
△			△		
△			△		
△			△		
△			△		

PROJECT No. 02156-02

SHEET No. S4

P:\02156\02\ACAD\STRU\S4.dwg Time:Jun03,2003-09:57am Login:lawrencej Dimscale:48 LTScale:24