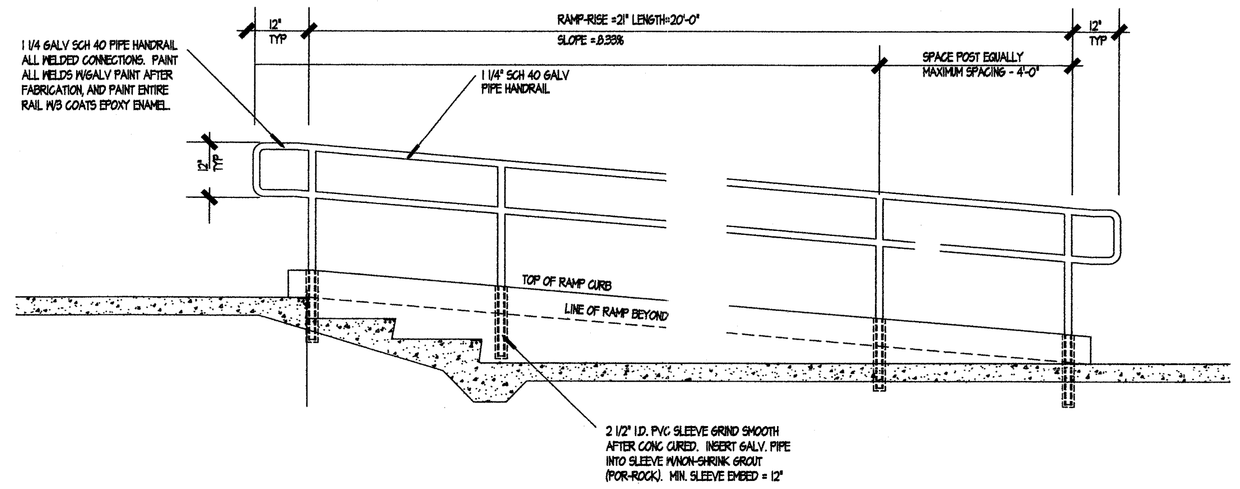

A RAMP LONGITUDINAL SECTION / ELEVATION

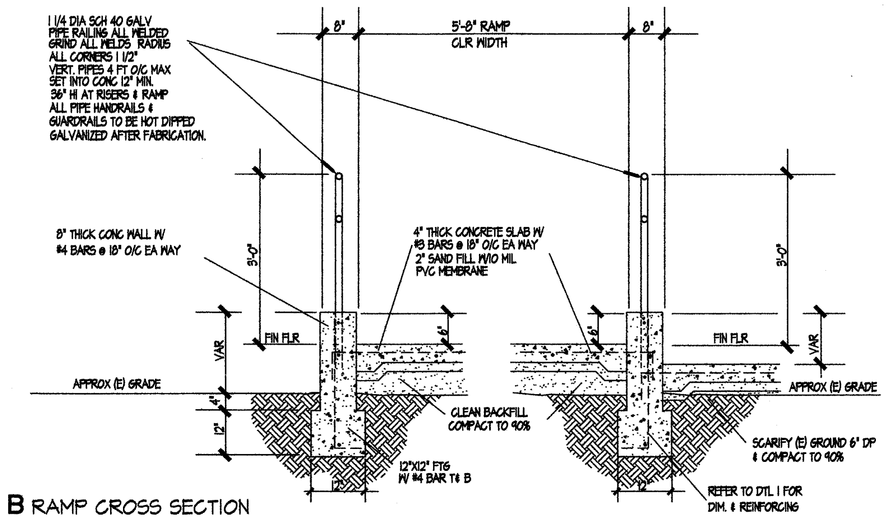

B RAMP CROSS SECTION

1 ACCESS RAMP DETAILS

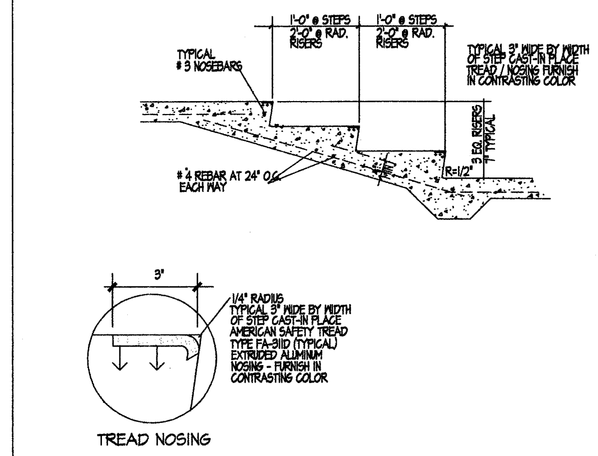

TREAD NOSING

12 SECTION - STEPS

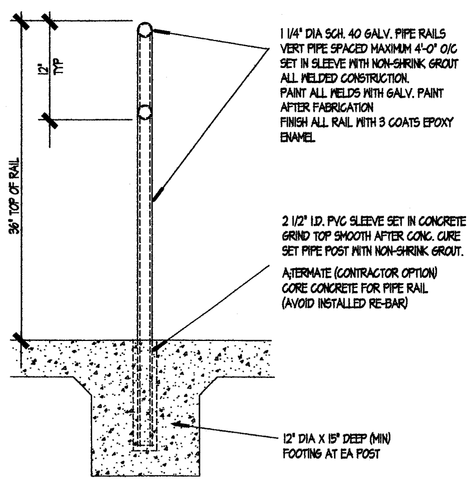

2 HANDRAIL DETAIL

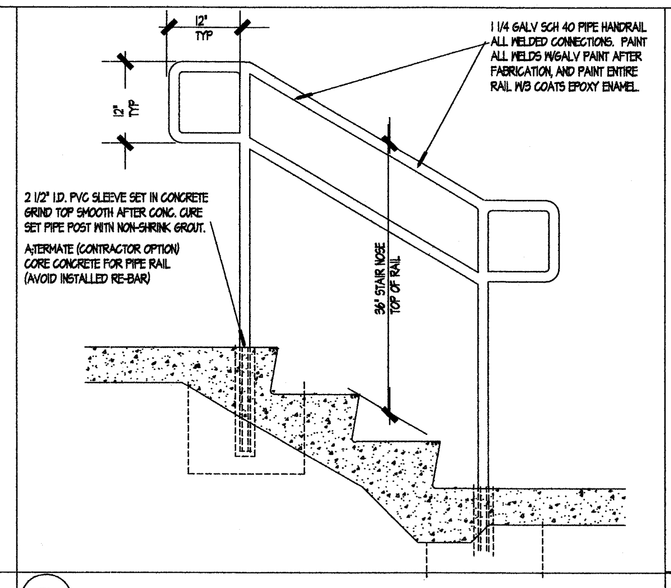

5 HANDRAIL DETAIL

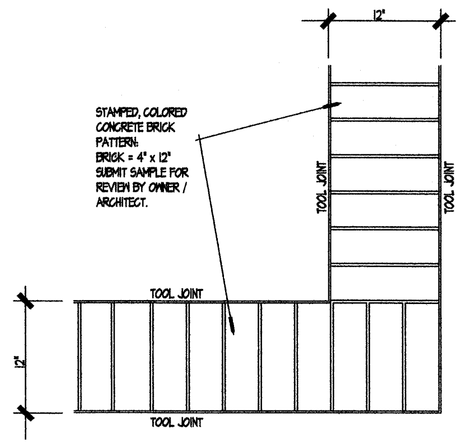

7 STAMPED CONCRETE BORDER PATTERN

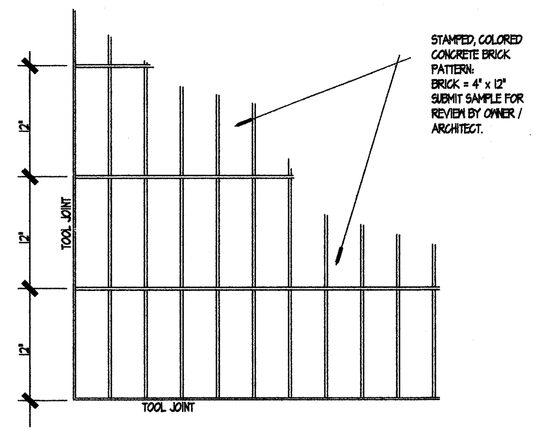

9 STAMPED CONCRETE FIELD PATTERN

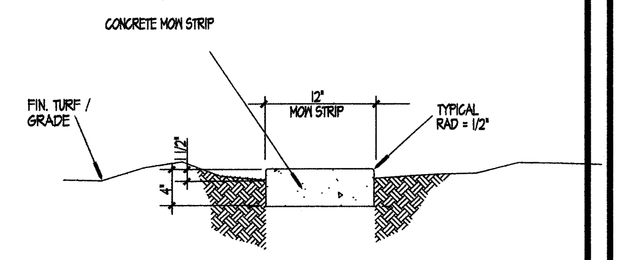

13 CONCRETE MOW STRIP

3

6

8

10

14

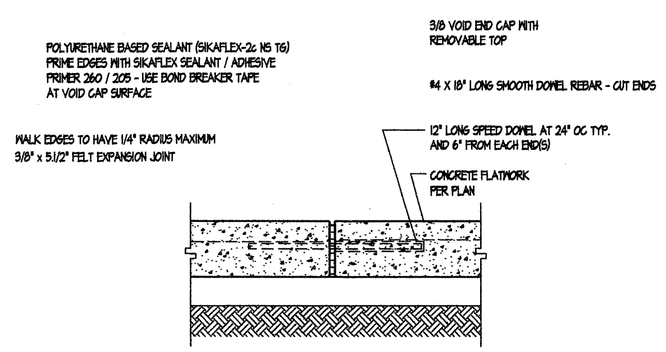

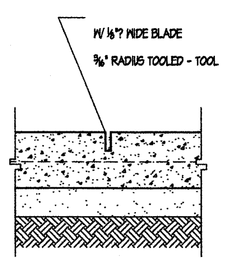

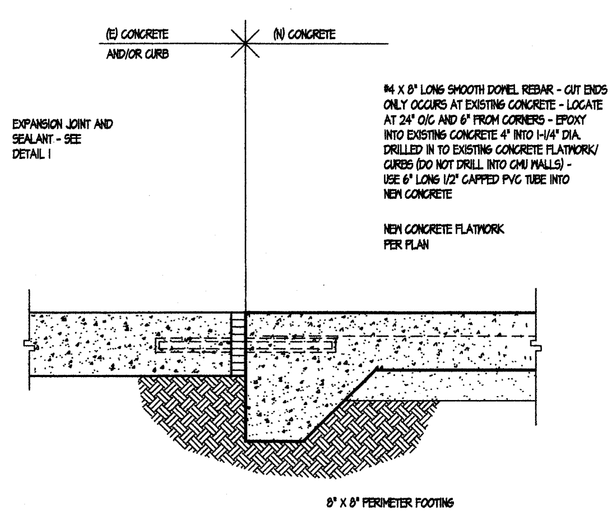

4 TYPICAL CONCRETE JOINTS

11

15

CARL G. ELLIOTT
ARCHITECT NCARB CERTIFIED

LICENSED ARCHITECT CARL G. ELLIOTT C17571 RENEWAL 5-31-15 STATE OF CALIFORNIA

5118 Bourdet Court
Bakersfield, California 93308
Tele 661.392.1089 Fax 661.392.1089

Project:

BAKERSFIELD CITY SCHOOL DISTRICT

BAKERSFIELD CITY SCHOOL DISTRICT "Where The Child Comes First"

RECONSTRUCTION of ENTRY WALKS & RAMPS

ROOSEVELT SCHOOL
2324 Verde Street
Bakersfield, California

DRAWINGS, SPECIFICATIONS AND DESIGNS / LAYOUTS CONTAINED HEREIN BY DRAWINGS ARE PROPERTY OF THE ARCHITECT AND SHALL REMAIN PROPERTY OF THE ARCHITECT. NO PART MAY BE COPIED, USED, OR DISCLOSED TO OTHERS OR USED IN CONNECTION WITH WORK OR PROJECT OTHER THAN THE SPECIFIC PROJECT IDENTIFIED HEREIN BY THESE DOCUMENTS, WITHOUT SPECIFIC WRITTEN CONSENT OF THE ARCHITECT. FURTHER, VISUAL CONTACT WITH THESE DRAWINGS OR SPECIFICATIONS CONSTITUTES CONCLUSIVE EVIDENCE OF ACCEPTANCE OF THE ABOVE NOTED LIMITATIONS.

WRITTEN DIMENSIONS ON DRAWINGS SHALL HAVE PRECEDENCE OVER SCALED SCALED DIMENSIONS. CONTRACTOR SHALL VERIFY AND BE RESPONSIBLE FOR ALL DIMENSIONS AND CONDITIONS ON THE JOB. CONTRACTOR MUST NOTIFY ARCHITECT ANY DIMENSION VARIATIONS OR DISCREPANCIES OR CONDITIONS SHOWN ON DRAWINGS. DETAILED SHOP DRAWINGS MUST BE SUBMITTED AND APPROVED BY ARCHITECT BEFORE PROCEEDING WITH FABRICATION.

Date:	Approved:
.	.

Date:	Issued for:
07/15/13	BIDDING

Date:		Revisions:
	1	
	2	
	3	
	4	

Sheet Title
DETAILS

Approved / Architect
Checked: Date: 07/07/13
Drawn By: Job No. 13-219

Sheet Number
A/3.2

Of FIVE Sheets