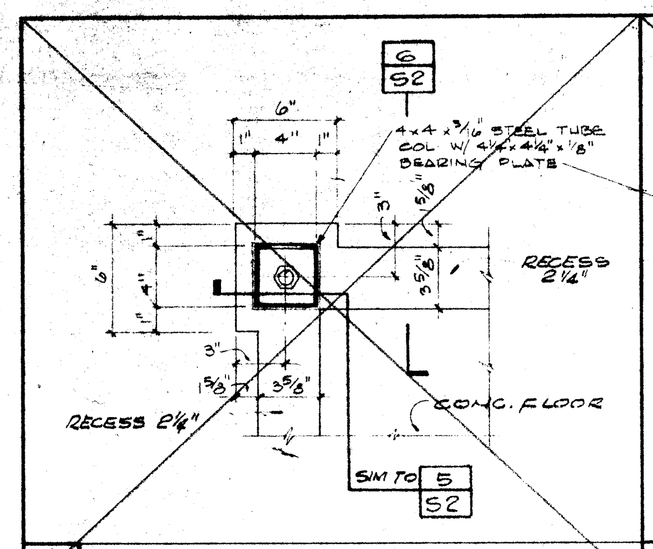

1/S2 PLAN OF CORNER COLUMN ANCHORAGE @ CONC SLAB FLOORS

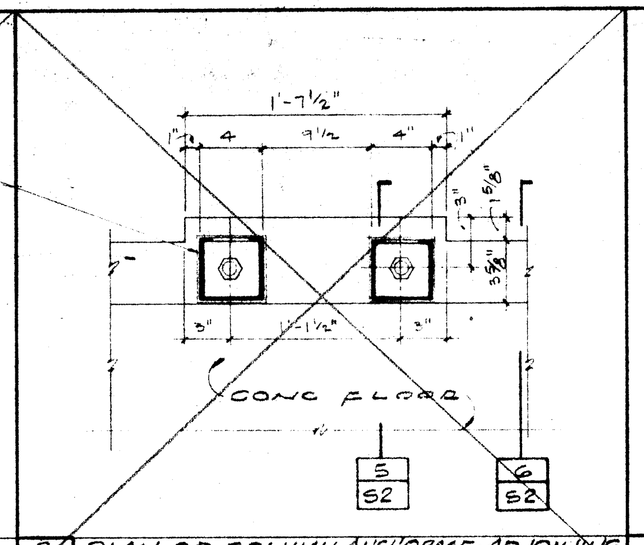

2/S2 PLAN OF COLUMN ANCHORAGE ADJOINING MODS SIDE TO SIDE @ CONC SLAB FLOORS

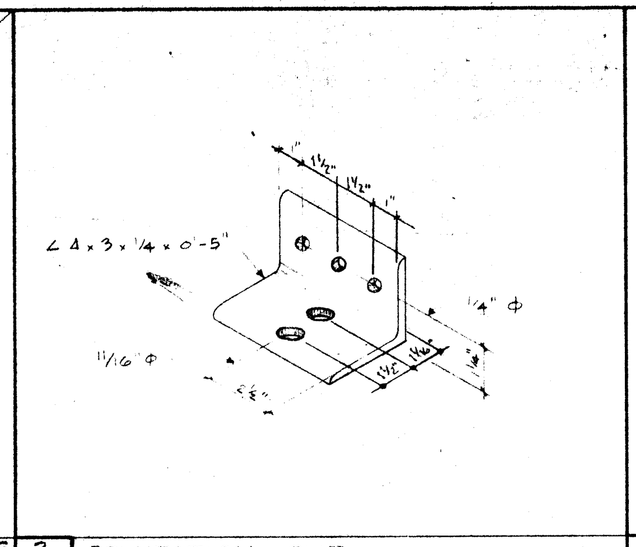

3/S2 FOUNDATION CLIP EP-2

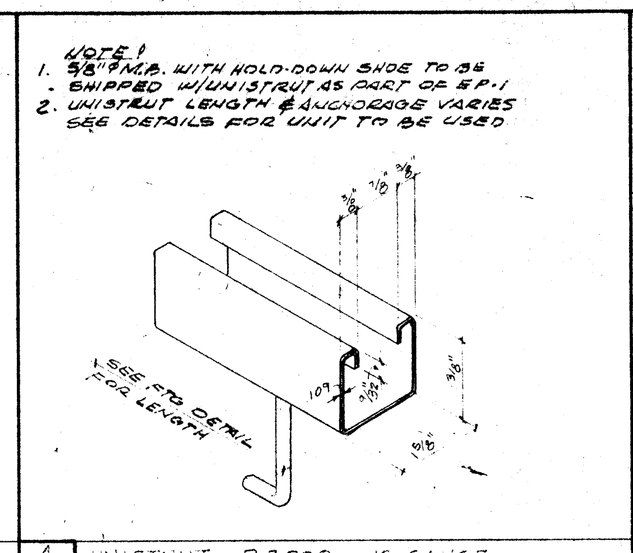

4/S2 UNISTRUT P 3000 12 GAUGE FOUNDATION CLIP ANCHOR EP-1

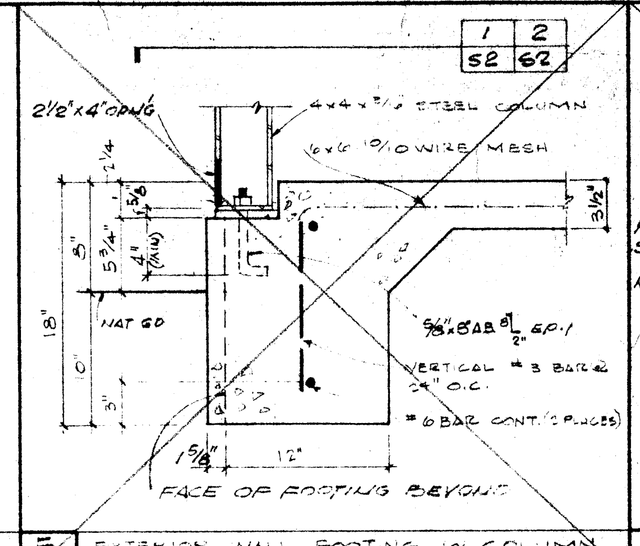

5/S2 EXTERIOR WALL FOOTING @ COLUMN FOR CONC. SLAB FLOORS

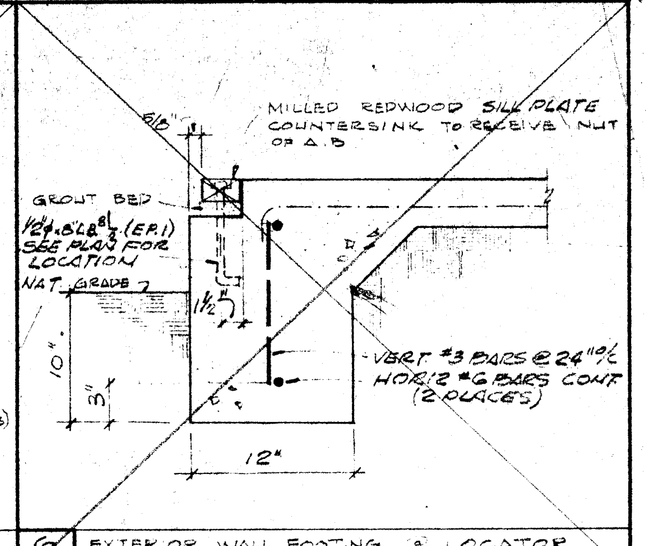

6/S2 EXTERIOR WALL FOOTING @ LOCATOR FOR CONC. SLAB FLOORS

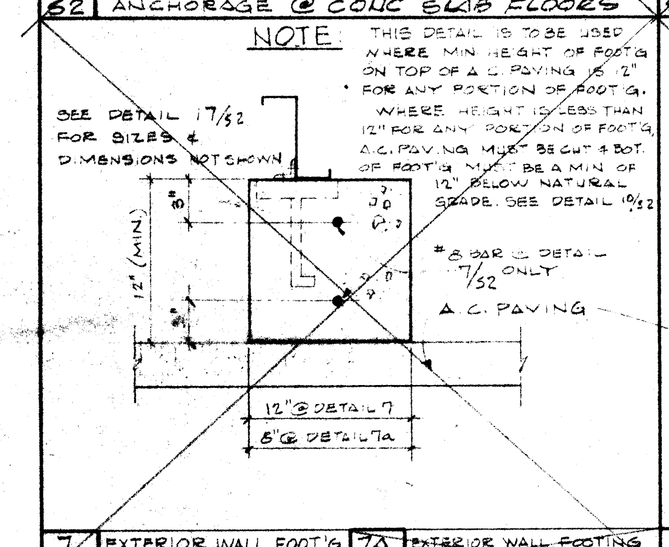

7/S2 EXTERIOR WALL FOOT'G END WALL ON A.C. PAV'G — 7A/S2 EXTERIOR WALL FOOTING SIDE WALL ON A.C. PAVING

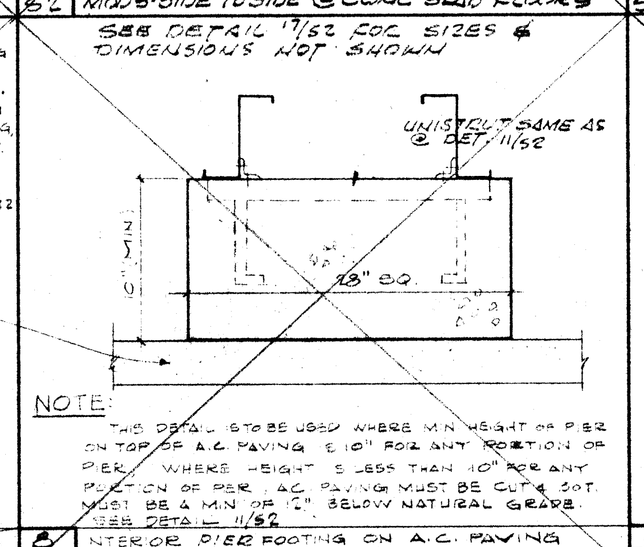

8/S2 INTERIOR PIER FOOTING ON A.C. PAVING

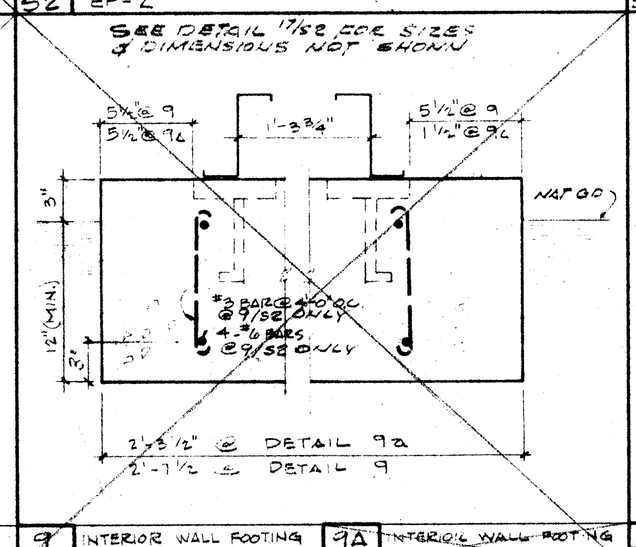

9/S2 INTERIOR WALL FOOTING END WALL TO END WALL — 9A/S2 INTERIOR WALL FOOTING END WALL TO SIDE WALL

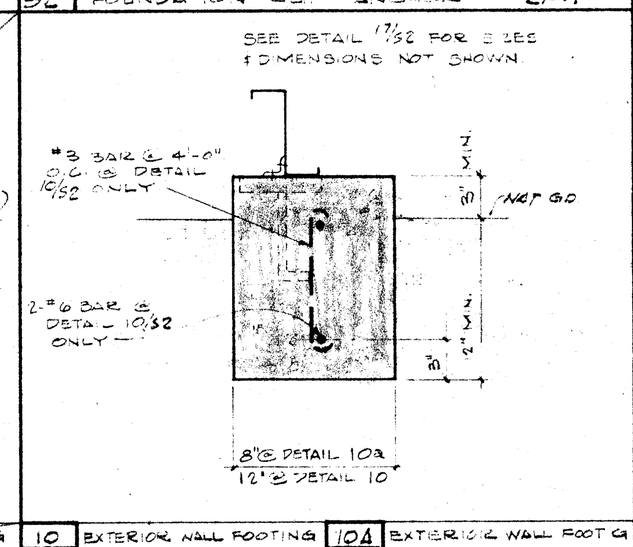

10/S2 EXTERIOR WALL FOOTING END WALL — 10A/S2 EXTERIOR WALL FOOT'G SIDE WALL

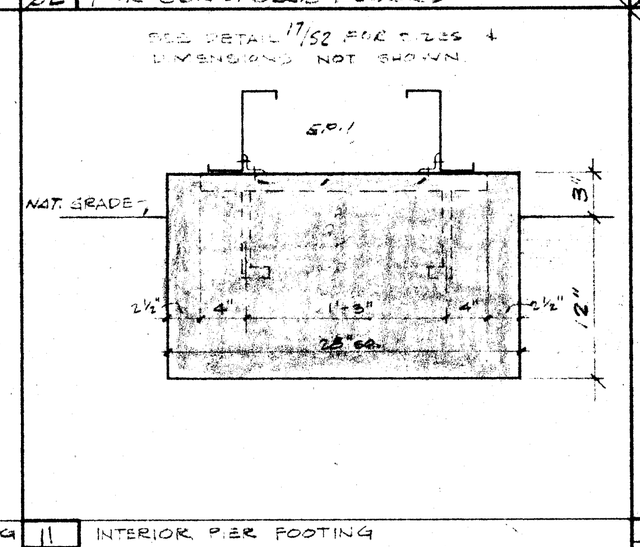

11/S2 INTERIOR PIER FOOTING

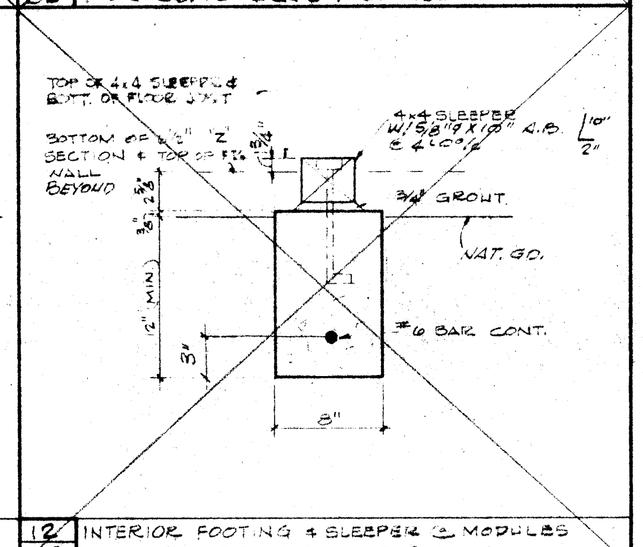

12/S2 INTERIOR FOOTING & SLEEPER @ MODULES WITH 125 LBS LIVE LOAD @ FLOORS

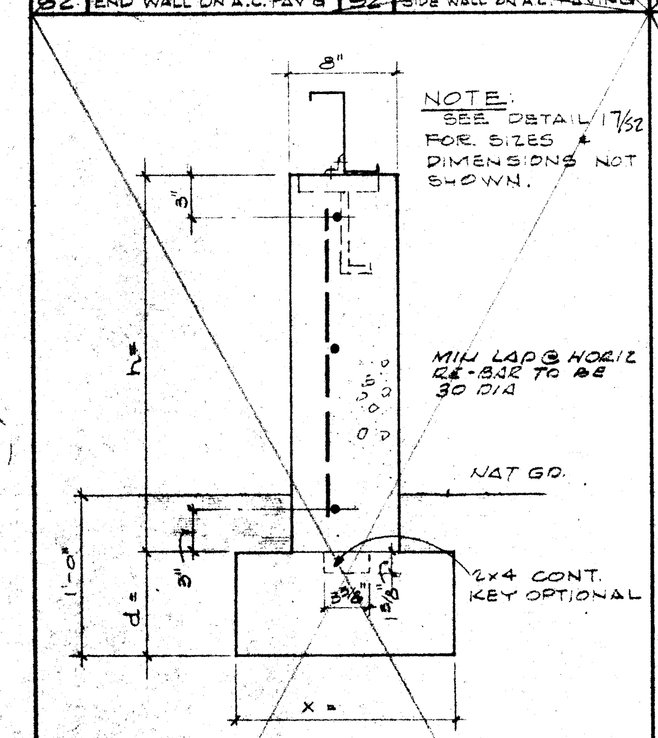

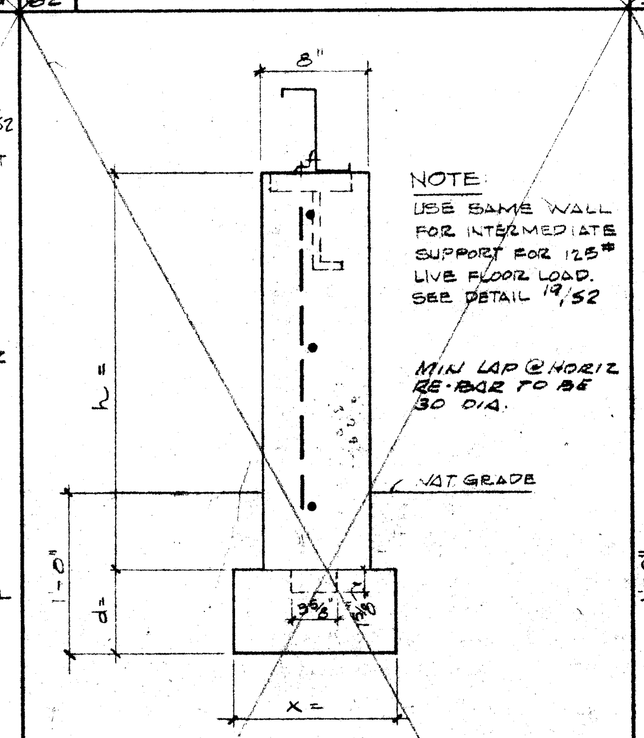

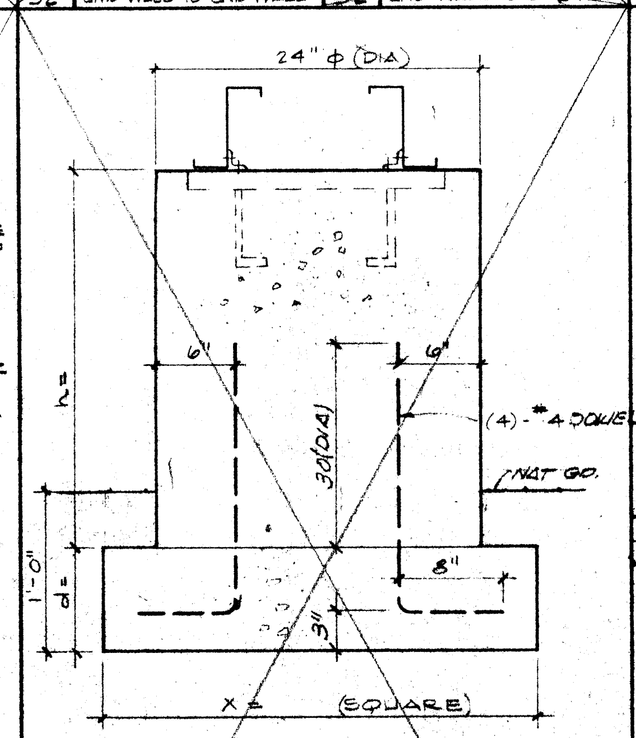

SCHEDULES BASED ON 1200# P.S.F. SOIL VALUE

h (FT)	d (IN)	X (IN)	HORIZ. BARS	VERT. BARS	BR'G P.S.F.
2'-6"	8	16	2-#5	#3@24	1050
3'-0"	8	16	3-#5	" "	1100
3'-6"	8	16	3-#5	" "	1140
4'-0"	8	16	3-#5	" "	1175
4'-6"	10	18	4-#5	" "	1125
5'-0"	10	18	4-#5	" "	1150

13/S2 END WALL FOUNDATION HIGH WALL

h (FT)	d (IN)	X (IN)	HORIZ. BARS	VERT. BARS	BR'G P.S.F.
3'-0"	6	12	#3@24"	#3@24"	1025
3'-6"	"	"	" "	" "	1075
4'-0"	"	"	" "	" "	1125
4'-6"	"	"	" "	" "	1175
5'-0"	"	"	" "	" "	1200

14/S2 SIDE WALL FOUNDATION HIGH WALL

h (FT)	d (IN)	X (IN)	HORIZ. BARS	VERT. BARS	BR'G P.S.F.
2'-6"	8	32	—	—	1075
3'-0"	8	32	—	—	1100
3'-6"	8	32	—	—	1130
4'-0"	8	32	—	—	1170
4'-6"	10	34	—	—	1110
5'-0"	10	34	—	—	1130

15/S2 INTERIOR PIER HIGH WALL

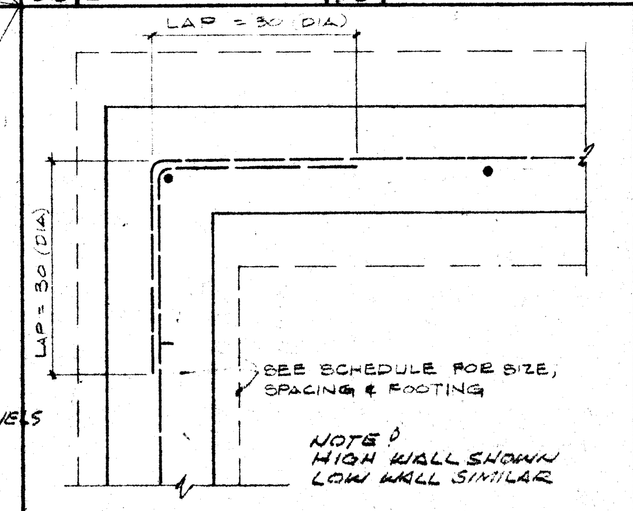

16/S2 FOUNDATION CORNER DETAIL (PLAN)

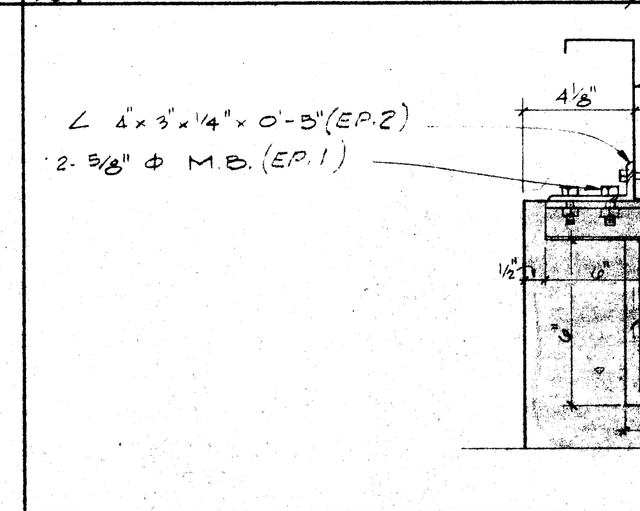

17/S2 UNISTRUT & "Z" DETAIL @ TOP OF WALL

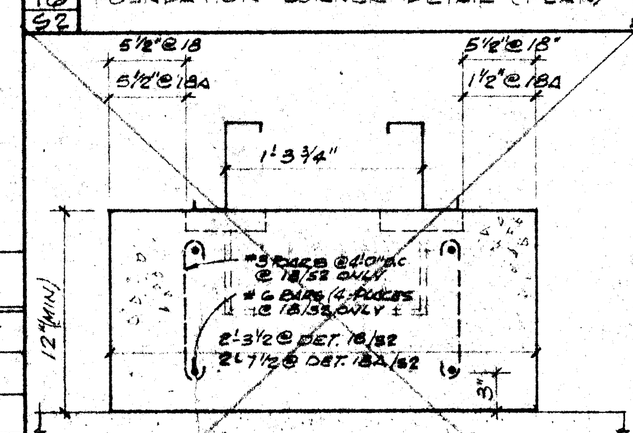

NOTE:- THIS DET. IS TO BE USED WHERE MIN HT OF FOOTING ON TOP OF A.C. PAVING IS 12" FOR ANY PORTION OF FOOTING. WHERE HT. IS LESS THAN 12" FOR ANY PORTION OF FOOTING, A.C. PAVING MUST BE CUT & BOTT. OF FOOTING MUST BE A MIN OF 12" BELOW NATURAL GRADE. SEE DETAIL 9/S2

18/S2 INTERIOR WALL FTG END WALL TO END WALL ON A.C. PAVING — 18A/S2 INTERIOR WALL FOOTING END WALL TO SIDE WALL ON A.C. PAVING

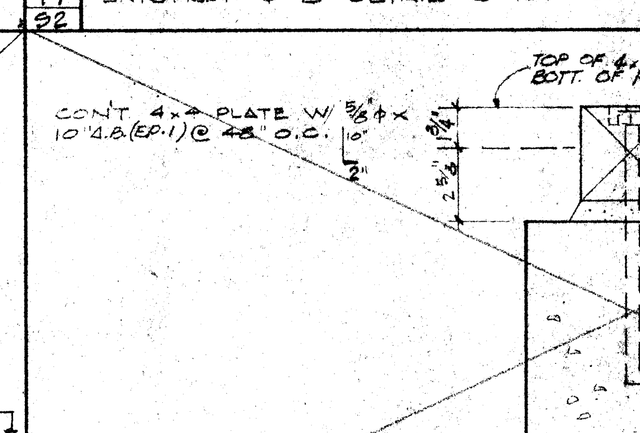

19/S2 PLATE DETAIL FOR 125# LIVE LOAD INTERMEDIATE SUPPORT HIGH WALL

BY	REVISIONS	DATE	NO.

The acceptance of this plan set constitutes agreement that the design, shop drawing and specifications for the project noted shall be used solely for said project and shall not be exhibited, delivered or transferred to anyone or reused for additional projects in whole or in part without the written consent of Speedspace Corporation.

REFERENCE PLAN SET NO.

APPROVED BY — APPROVED OCT 31 1969 — OFFICE OF ARCHITECTURE & CONSTRUCTION

APPROVED BY — STATE FIRE MARSHAL

APPROVED BY — SCHOOL DISTRICT

KING DENNEE STEINMANN-KING CONSULTING ENGINEERS 15801 RIVERSIDE DRIVE SHERMAN OAKS, CALIF. 91403

DRAWN BY R. HOCKENHULL — CHECKED BY STA — DATE 9-18-69

FOUNDATION DETAILS

BAKERSFIELD CITY S.D.

BAKERSFIELD, CALIF.

SPEEDSPACE CORPORATION — Var-I-Purpose RELOCATABLES BUILDINGS — P.O. Box 590 — Santa Rosa, California 95401 — Telephone (707) 544-1661

AITC — Licensed Plant No. M-140 — L.A. City Licensed Fabricator No. 551

SPEEDSPACE JOB NO. 69-132-0

SHEET NO. S-2 OF 31