GENERAL NOTES

1. Indicates duct lining. Supply air and return air shall have 1" - 3 pound - exhaust air shall have 1/2" - 3 pound vinyl coated glass fiber lining. Dimensions shown are net inside of lining.
2. Unless otherwise noted, all supply and return air ducts shall be lined from unit to a minimum of fifteen (15) feet beyond.
3. All concealed supply and return air ducts, not lined, shall be wrapped with 2" - 3/4 pound glass fiber duct wrap.
4. All square or rectangle ducts turns from (45° to 90°) including turns at registers shall be equipped with turning vanes.

EQUIPMENT SCHEDULE

AC 1
Day & Night No. 60/140 YAC-301 (6000#)
2200 CFM @ 0.55" Ext. S.P.
140 MBH Input - 105 MBH Output Nat. Gas
(Modulating Gas Valve by Others)
52.4 MBH Sen. Clg. Cap. @ 105°F/62°F
15.4 Nameplate Amps - 230V-1ph-60 cycle
1/3 H.P. Cond. Fan - 3/4 H.P. Evap. Fan
Provide: (2) 24"x24"x2" Farr D/C 22 Filters
Note: Max. Allowable Fuse Size 60 Amps.

AC 2
Day & Night No. 42/110 YAC-301 (6000#)
1400 CFM @ 0.40 Ext. S.P.
110 MBH Input - 82.5 MBH Output Nat. Gas
(Modulating Gas Valve by Others)
33.4 MBH Sen. Clg. Cap. @ 105°F/62°F
21.3 Nameplate Amps - 230V-1ph-60 cycle
1/3 H.P. Cond. Fan - 1/3 H.P. Evap. Fan
Provide: (2) 16x20x2 Farr D/C 22 Filters
and Belt Drive Kit
Note: Max. Allowable Fuse Size 45 Amps

EF 1
Jenn Air No. 108 CR
300 CFM @ 1/4" S.P.
1/12 H.P. - 860 RPM - 1/12 H.P. - 120V
Provide: Bird Screen & Back Draft Damper

EF 2
Jenn Air No. 142 BCR
410 CFM @ 1/4" S.P.
1/4 H.P. - 120V-1ph
690 R.P.M. - 2660 F.P.M. Tip Spd.
Provide: Bird Screen & Back Draft Damper

REGISTERS

CS-1 Barber Colman No. 812 SFSV 2 WY
CS-2 Barber Colman No. 612 SFSV 2 WY
CS-3 Barber Colman No. 1018 SFSV 2 WY
CS-4 Barber Colman No. 818SFSV 2 WY
CS-5 Barber Colman No. 818SASV 4 WY
CS-6 Barber Colman No. 1218 SASV 4 WY
CS-7 Barber Colman No. 812 SASV 3 WY
CS-8 Barber Colman No. 1212 SASV 3 WY
CS-9 Barber Colman No. 2024 SASV 3 WY
CR-1 Barber Colman No. 8MRV
CR-2 Barber Colman No. 1416 PESV
CR-3 Barber Colman No. 2224 PESV
CE-1 Barber Colman No. 1012 PESV
CE-2 Barber Colman No. 1416 PESV
WR-1 Barber Colman No. 8MRV

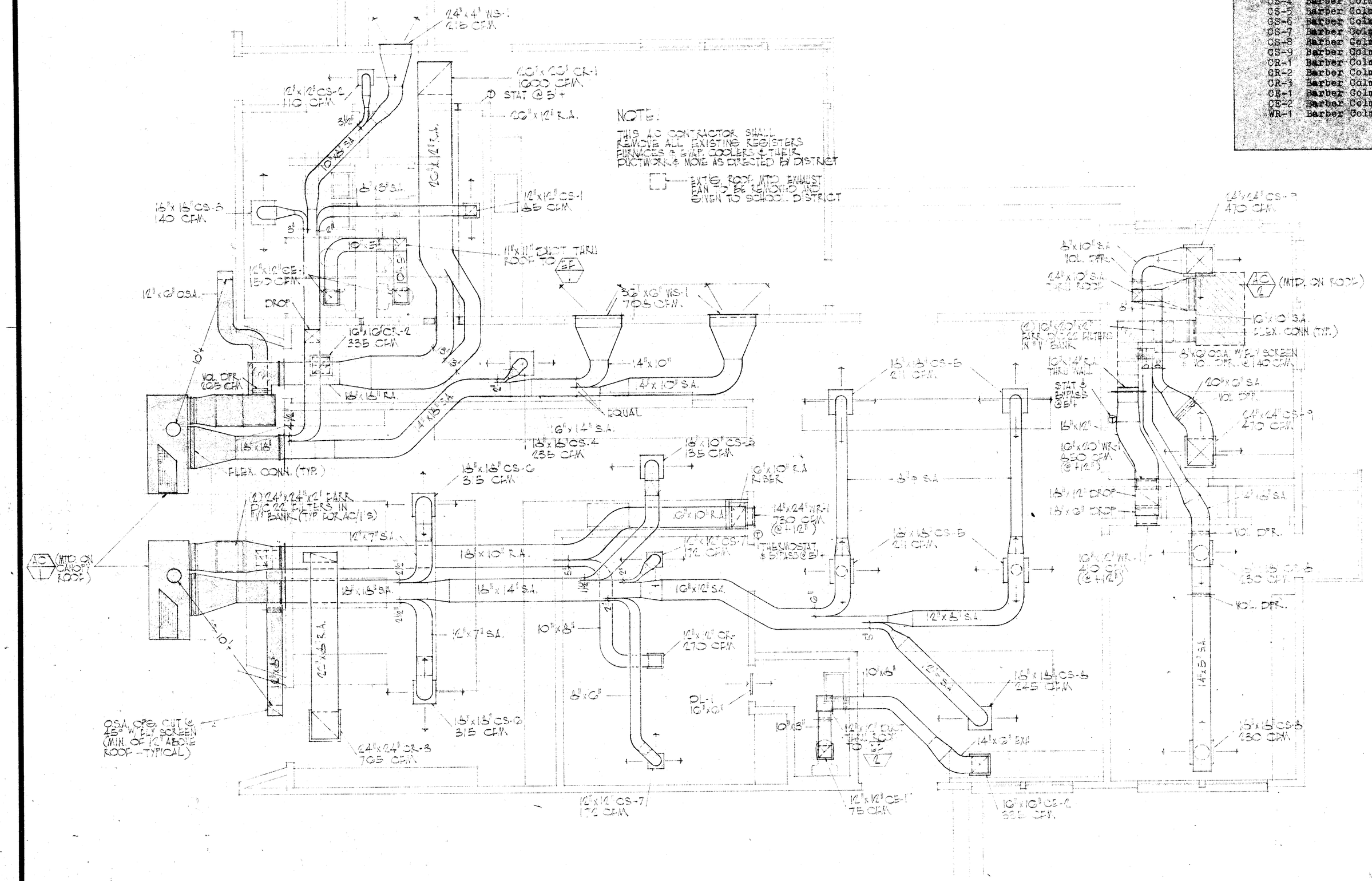

AIR CONDITIONING FLOOR PLAN

1/4"=1'0"

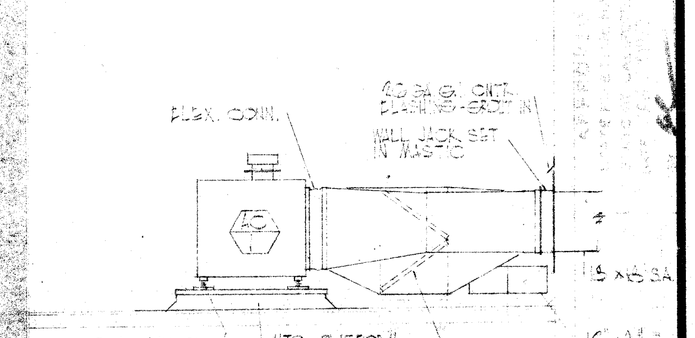

(1) SECTION @ A.C. 1

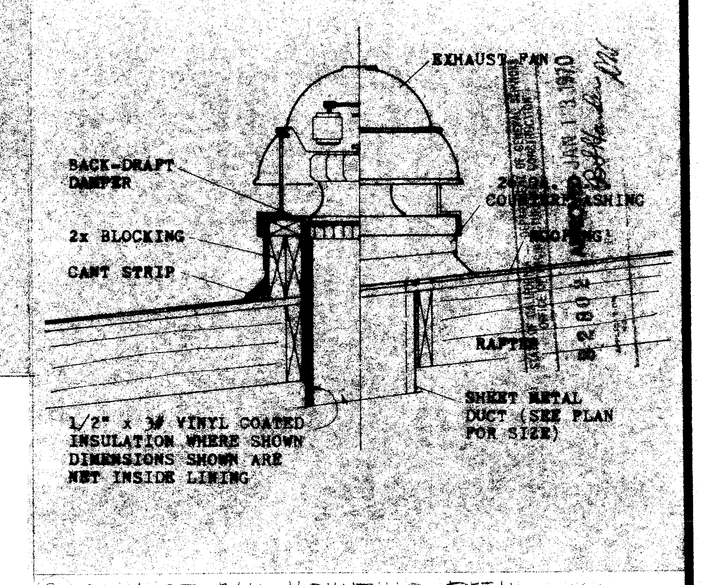

(2) EXHAUST FAN MOUNTING DETAIL NO SCALE

Install modulating gas valves Add #1.

(3) MECHANICAL WIRING DIAGRAM NO SCALE

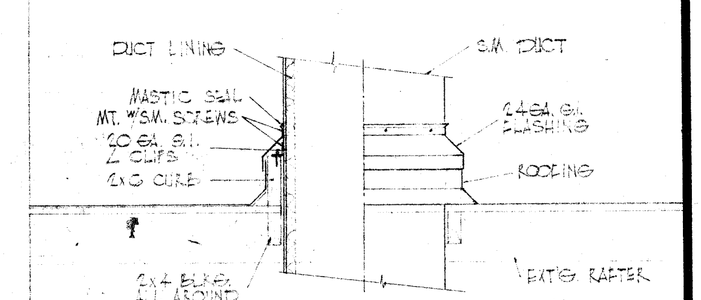

(4) DUCT THRU ROOF DETAIL NO SCALE

CHECK AND VERIFY ALL DIMENSIONS AND CONDITIONS AT THE JOB SITE BEFORE PROCEEDING WITH THE WORK. REPORT ANY DISCREPANCIES TO THE ARCHITECT

DRAWN: E. W. HAZELTON / M. RICHSON
DATE: Nov. 24, 69

FRAPWELL AND GHEZZI ARCHITECTS A.I.A.
P. O. BOX 2022
1717 - 28th STREET BAKERSFIELD, CALIF. 93303
PHONE 324-3441

AIR CONDITIONING PLAN & DETAIL
ADMINISTRATION REHABILITATION
MT. VERNON SCHOOL
BAKERSFIELD CITY SCHOOL DISTRICT
BAKERSFIELD, KERN COUNTY, CALIF.

SHEET M-1 OF 1 SHEETS

JOB NO: 69.107 R