AGENCY TRACKING NO. 63321-356
FILE NO. 15-6

IDENTIFICATION STAMP
DIV. OF THE STATE ARCHITECT
OFFICE OF REGULATION SERVICES
03-120240
AC ___ FLS ___ SS ___
DATE JAN 0 2 2020

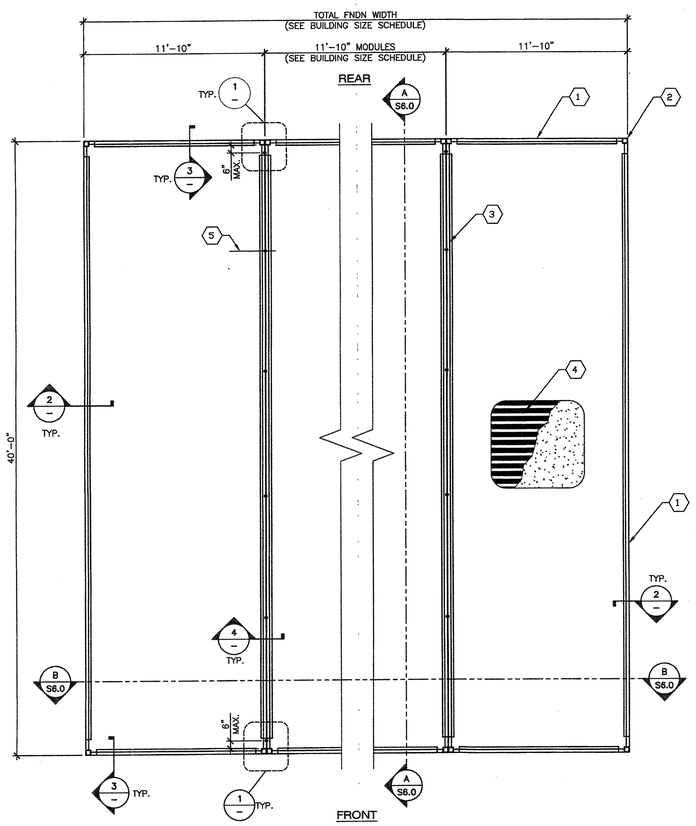

FLOOR FRAMING PLAN (CONCRETE FLOOR w/ 3WH-DECK OR 3WxH DECK OPTION) 150 PSF MAX FLOOR LIVE LOAD

SCALE 1/4"=1'-0" | A

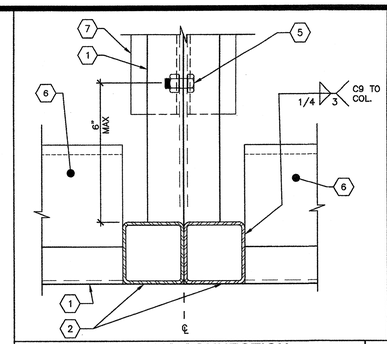

TYP. FLOOR BEAMS CONNECTION

SCALE 3" = 1'-0" | 1

1. FLOOR BEAM PER SHEET S5.0. USE SINGLE SIZE CHANNEL THROUGHOUT FLOOR SYSTEM. USE C10 OPTION WHEN USING 6¼" THICK CONCRETE SLAB OPTION.
2. HSS COLUMN PER SHEET S5.0.
3. NOT USED
4. 2" MIN. LIGHTWEIGHT CONC. FILL w/ 6x6/W1.4xW1.4 WWF w/ 1'-0" LAP OVER ASC 18 GA. 3WH OR 3WxH GALVANIZED DECK (5" MAX TOTAL THICKNESS) SEE 5 & 6/– FOR DECK PROPERTIES AND ATTACHMENT PATTERN.
5. 5/8"ø MB @ 10'-0" O.C. MAX. 6" MAX FROM INSIDE FACE OF COLUMNS PER DETAILS 1 & 4/–.
   BOLT HOLE THRU FLOOR CHANNELS = BOLT ø + 1/16".
6. C9x13.4" DECK SUPPORT CHANNEL PER DETAIL 3/–.
   C9 MAY HAVE 3"ø MAX HOLES THRU WEB WITHOUT WEB REINFORCEMENT PER THE FOLLOWING:
   1. HOLES MUST BE CENTERED ON WEB.
   2. MULTIPLE HOLES MUST BE SPACED A MIN. OF 24" APART.
   3. HOLES MUST BE 24" MIN. FROM INSIDE FACE OF COLUMNS.
7. ∠4"x3"x¼" LLH (MIN.) DECK SUPPORT ANGLE PER DETAIL 2 & 4/–

KEY NOTES

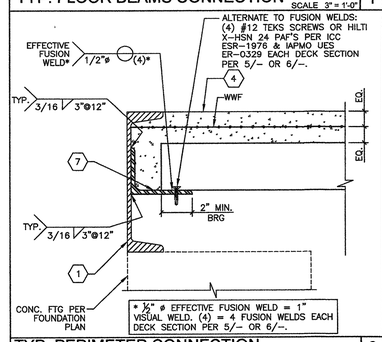

TYP. PERIMETER CONNECTION

SCALE 3" = 1'-0" | 2

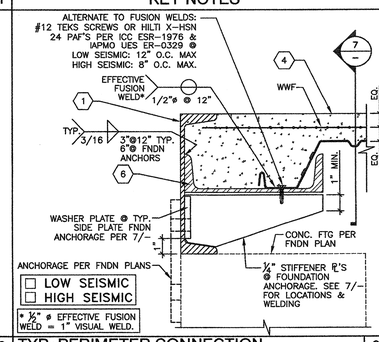

TYP. PERIMETER CONNECTION

SCALE 3" = 1'-0" | 3

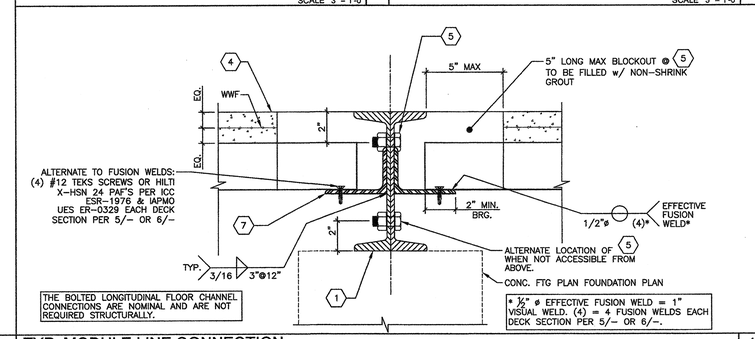

TYP. MODULE LINE CONNECTION

SCALE 3" = 1'-0" | 4

BUILDING SIZE SCHEDULE			
BUILDING SIZE (FT)	TOTAL # OF 12'-0" WIDE MODULES	TOTAL # OF 6" CENTER MODULES	TOTAL FNDN WIDTH
☐ 24'x40'	2	0	23'-8½"
☐ 36'x40'	3	1	35'-6¾"
☐ 48'x40'	4	2	47'-5"
☐ 60'x40'	5	3	59'-3¼"
☒ 72'x40'	6	4	71'-1½"
☐ 84'x40'	7	5	83'-11¾"
☐ 96'x40'	8	6	94'-10"
☐ 108'x40'	9	7	106'-8¼"
☐ 120'x40'	10	8	118'-6½"

NOTES:

1. TOTAL BUILDING WIDTH INCLUDES ¼" PER MODULE CONSTRUCTION TOLERANCE PER FOUNDATION SHEETS S1.0, S1.1, S1.2, & S1.3

BUILDING SIZE SCHEDULE

MINIMUM PROPERTIES				
PLAN DESIGNATION	DECK TYPE	S_{gbot} IN³/FT	I_g IN⁴/FT	AVAILABLE DIAPHRAGM SHEAR (LRFD)
	3"–18 GA ASC 3WxH GALV DECK (36" WIDE)	0.789	1.233	1565 PLF (LRFD) w/ 2" LWC TOPPING (5" TOTAL SLAB THICKNESS)

DECK PROFILE

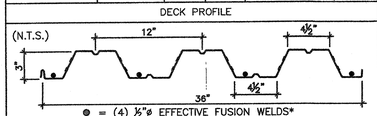

● = (4) ½"ø EFFECTIVE FUSION WELDS*
ALTERNATE (4) #12 TEKS SCREWS OR HILTI X-HSN 24 PAF'S.
(SEE 3/– FOR ATTACHMENT AT PARALLEL SUPPORTS)
* ½"ø EFFECTIVE FUSION WELD = 1"ø VISUAL FUSION WELD

SIDE LAP ATTACHMENT TO BE BOTTON PUNCHED @ 36" O.C.
NOTE: ASC STEEL DECKING: IAPMO UES ER #0329

3WxH MTL DECK PROPERTIES & PROFILE NTS | 5

MINIMUM PROPERTIES				
PLAN DESIGNATION	DECK TYPE	S_{gbot} IN³/FT	I_g IN⁴/FT	AVAILABLE DIAPHRAGM SHEAR (LRFD)
	3"–18 GA ASC 3WH GALV DECK (36" WIDE)	0.704	1.113	1558 PLF (LRFD) w/ 2" LWC TOPPING (5" TOTAL SLAB THICKNESS)

DECK PROFILE

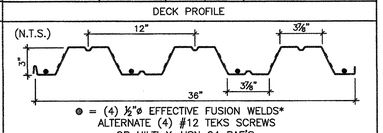

● = (4) ½"ø EFFECTIVE FUSION WELDS*
ALTERNATE (4) #12 TEKS SCREWS OR HILTI X-HSN 24 PAF'S.
(SEE 3/– FOR ATTACHMENT AT PARALLEL SUPPORTS)
* ½"ø EFFECTIVE FUSION WELD = 1"ø VISUAL FUSION WELD

SIDE LAP ATTACHMENT TO BE BOTTON PUNCHED @ 36" O.C.
NOTE: ASC STEEL DECKING: IAPMO UES ER #0329

3WH MTL DECK PROPERTIES & PROFILE NTS | 6

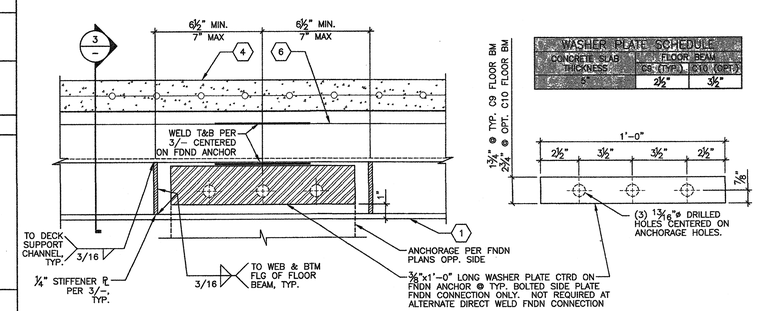

WASHER PLATE SCHEDULE		
CONCRETE SLAB THICKNESS	FLOOR BEAM	
	C9 (TYP.)	C10 (OPT.)
5"	2½"	3½"

TYP. REINFORCED FRAMING @ FOUNDATION ANCHORAGE

SCALE 3" = 1'-0" | 7

AMS American Modular Systems
787 Spreckels Ave., Manteca, CA 95336
Phone (209) 825-1921 - Fax (209) 825-7018
www.americanmodular.com

INTELLECTUAL-PROPERTY & PROPRIETARY RIGHTS STATEMENT
COPYRIGHT © AMERICAN MODULAR SYSTEMS (AMS)
AMS OWNS ALL COPYRIGHT AND OTHER INTELLECTUAL–PROPERTY AND PROPRIETARY RIGHTS IN THESE DRAWINGS, SPECIFICATIONS, AND THE MATERIAL CONTAINED HEREIN. CERTAIN ELEMENTS SHOWN IN THESE DOCUMENTS ARE REGISTERED TRADEMARKS OF AMS. ALL PATENTABLE MATERIALS CONTAINED IN THESE DOCUMENTS AND ORIGINATING WITH AMS WILL REMAIN THE SOLE PROPERTY OF AMS. THESE DRAWING, SPECIFICATIONS, AND THE MATERIAL CONTAINED HEREIN MAY NOT BE REPRODUCED, TRANSMITTED, COPIED, DISTRIBUTED, MODIFIED, OR OTHERWISE DISPOSED OF (DIRECTLY OR INDIRECTLY) AND MAY NOT BE USED (IN WHOLE OR IN PART) TO ASSIST IN THE CONSTRUCTION, DESIGN, OR OTHER MAKING OF, OR FOR THE PURPOSE OF FURNISHING ANY INFORMATION FOR THE CONSTRUCTION, DESIGN, OR OTHER MAKING OF, ANY BUILDINGS (MODULAR OR OTHERWISE), DRAWINGS, SPECIFICATIONS, PRINTS, APPARATUS, OR PARTS THEREOF, EXCEPT AS EXPRESSLY PERMITTED BY WRITTEN CONSENT OF, OR BY A WRITTEN AGREEMENT WITH AMS. ANY USE OF THESE DRAWINGS, SPECIFICATIONS, OR MATERIALS REQUIREMENTS WILL NOT BE CONSTRUED AS PUBLICATION IN DEROGATION OF AMS'S COPYRIGHT OR OTHER INTELLECTUAL–PROPERTY OR PROPRIETARY RIGHTS

PRE–CHECKED SET NAME

24'x40' THRU 120'x40' HIGH PITCH MODULAR BUILDINGS

SITE SPECIFIC PROJECT NAME

SHEET TITLE

FLOOR FRAMING PLAN & DETAILS FOR CONCRETE FLOOR w/ 3WH-DECK OR 3WxH DECK OPTION (150 PSF MAX FLOOR L.L.)

MANUFACTURER PROFESSIONAL OF RECORD ON PC

LICENSED ARCHITECT PATRICK CLAYSON No C12631 Rem 3-31-19 STATE OF CALIFORNIA

REGISTERED PROFESSIONAL ENGINEER MARK D. FRIMES No. S3380 STRUCTURAL STATE OF CALIFORNIA

01-08-19

THESE DRAWINGS ARE PRELIMINARY AND NOT FOR CONSTRUCTION UNLESS STAMPED & SIGNED BY THE ENGINEER OF RECORD

PROJECT SPECIFIC STATE AGENCY APPROVAL

IDENTIFICATION STAMP
DIV. OF THE STATE ARCHITECT
02 117846
AC ___ FLS ___ SS ___
DATE AUG 7 2020

ORIGINAL PC STATE AGENCY APPROVAL

IDENTIFICATION STAMP
DIV. OF THE STATE ARCHITECT
REV
PC 02–115726
AC ___ FLS ___ SS 403
DATE 6-21-2019

PRE-CHECK (PC) DOCUMENT
CODE 2016 CBC
A SEPARATE PROJECT APPLICATION FOR CONSTRUCTION IS REQUIRED

REVISIONS
1 GENERAL REVISIONS - 01/02/19
2
3
4

DRAWN BY: -
SCALE: AS NOTED
DATE: -

SHEET NUMBER

S3.3-02