THE WELDING PROCEDURE QUALIFICATION TEST RECORD AND WELDING PROCEDURE SPECIFICATION FOR THIS WELD SHALL BE PREPARED IN ACCORDANCE WITH AWSD.1-89 AND SUBMITTED TO THE STRUCTURAL ENGINEER FOR REVIEW AND SUBMITTAL TO THE DSA. TYPICAL DETAILS 1/S4, 2/S4 AND 3A/S4. ALL WELDS USED IN PRIMARY MEMBERS AND CONNECTIONS IN THE LATERAL FORCE- RESISTING SYSTEMS SHALL BE MADE WITH A FILLER METAL THAT HAS A MINIMUM CHARPY V-NOTCH TOUGHNESS OF 20 FT-LBS AT MINUS 20 DEGREES F, AS DETERMINED BY AWS CLASSIFICATION OR MANUFACTURER CERTIFICATION.

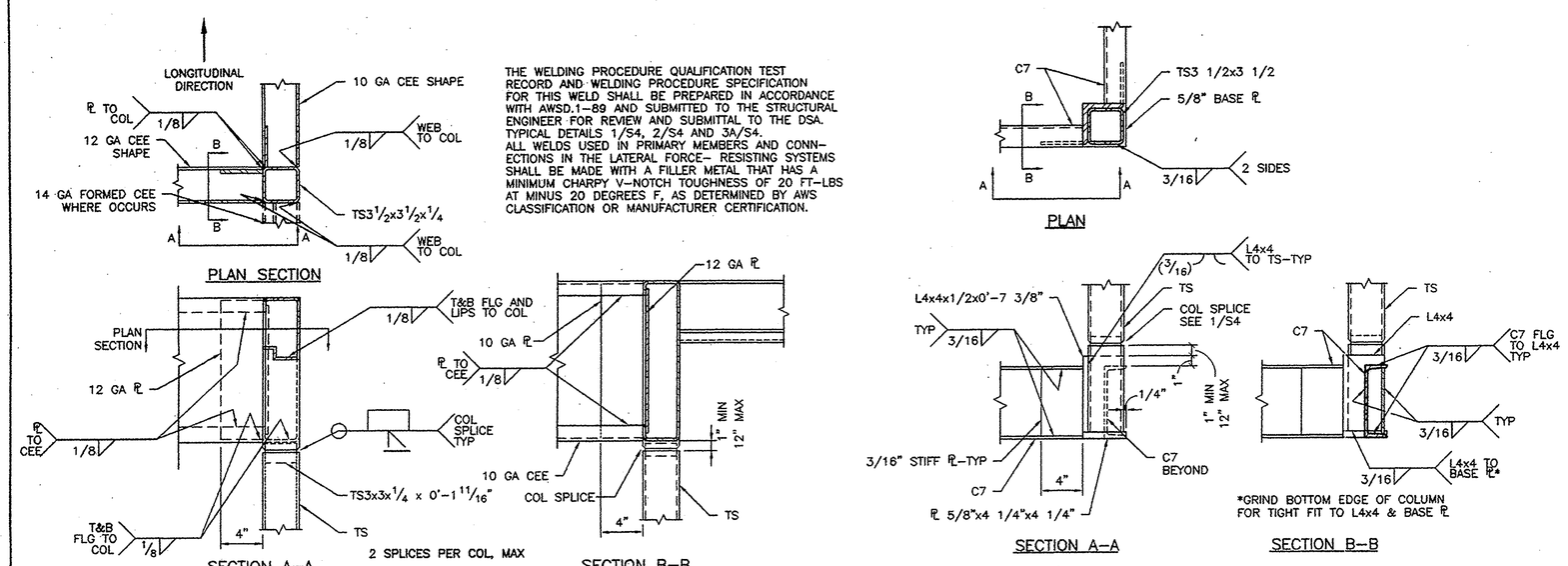

1/S4 TOP CONNECTION DETAIL
1 1/2" = 1'-0"

2/S4 BOTTOM CONNECTION DETAIL
1 1/2" = 1'-0"

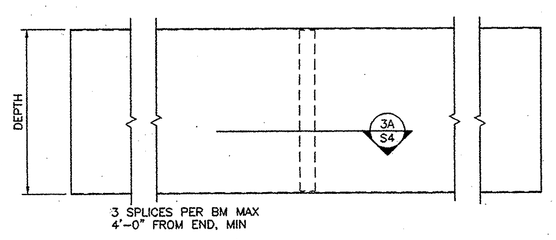

3/S4 OPTIONAL BEAM SPLICE LOCATION DETAIL
NO SCALE

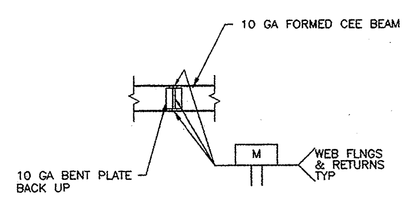

3A/S4 BEAM SPLICE DETAIL
1 1/2" = 1'-0"

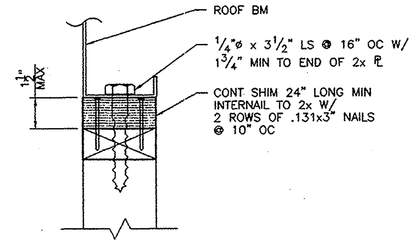

4/S4 OPTIONAL SHIM @ SIDEWALL/ ENDWALL SIM DETAIL
1 1/2" = 1'-0"

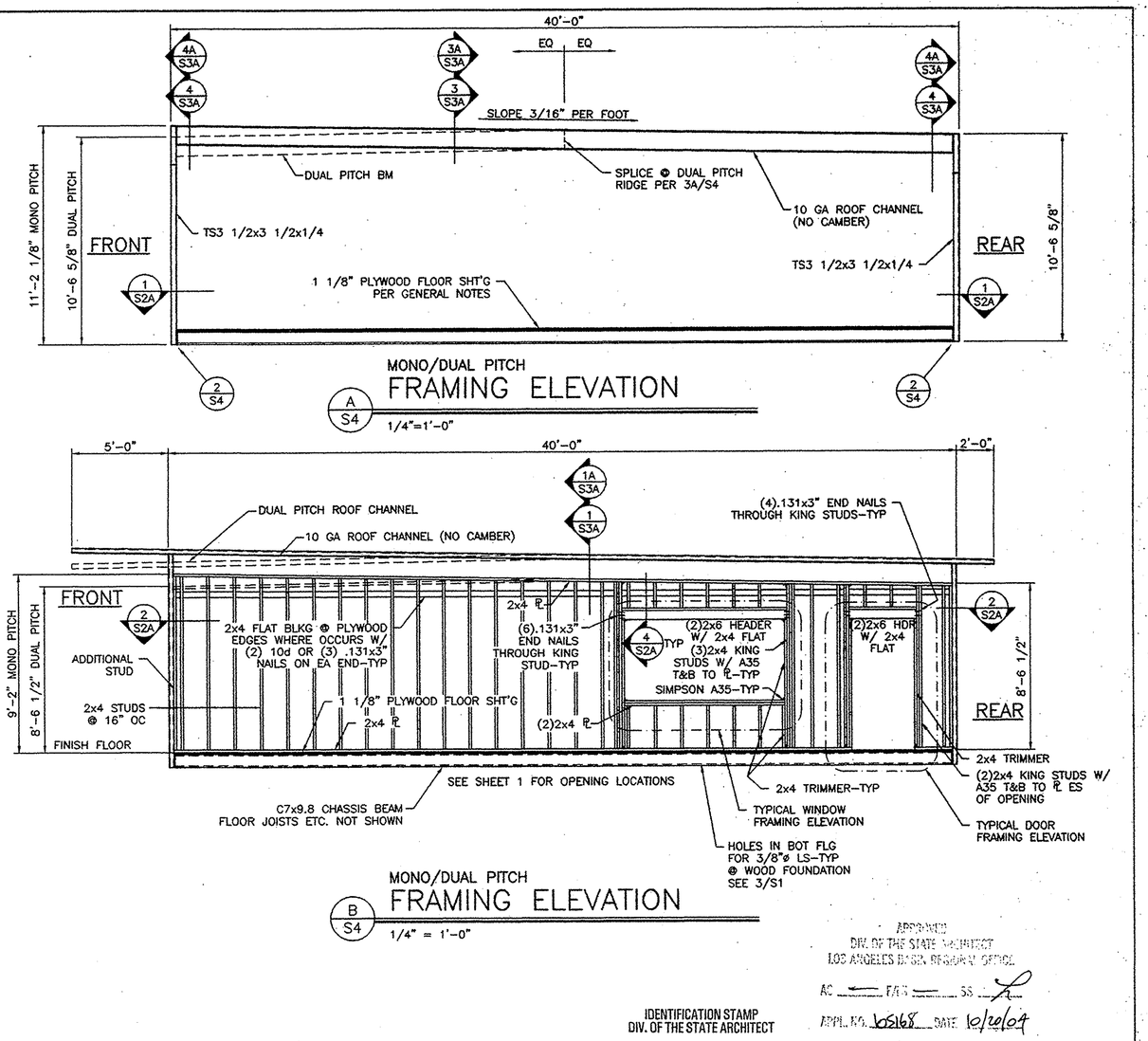

A/S4 MONO/DUAL PITCH FRAMING ELEVATION
1/4"=1'-0"

B/S4 MONO/DUAL PITCH FRAMING ELEVATION
1/4" = 1'-0"

APPROVED
DIV. OF THE STATE ARCHITECT
LOS ANGELES DISTRICT REGIONAL OFFICE
AC ___ FLS ___ SS ___
APPL. NO. 05168 DATE 10/20/04

IDENTIFICATION STAMP
DIV. OF THE STATE ARCHITECT
APP03 111193
AC ___ FLS ___ SS ___
DATE NOV 1 2007

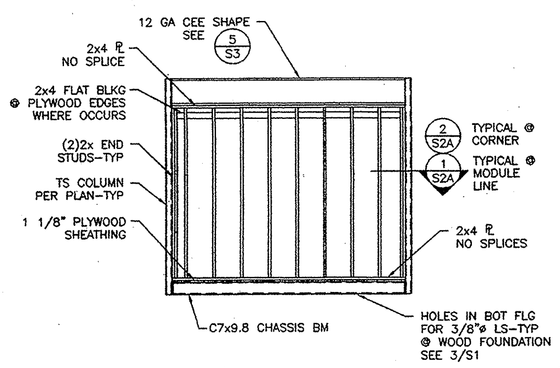

C/S4 SOLID END WALL ELEVATION
1/4" = 1'-0"

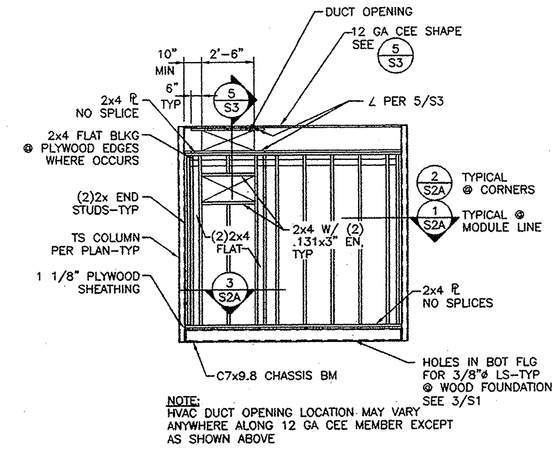

SEE SHEET 1 FOR OPENING LOCATION
D/S4 HVAC END WALL ELEVATION
1/4" = 1'-0"

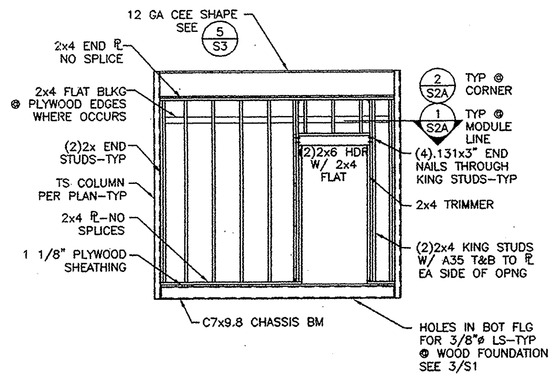

SEE SHEET 1 FOR OPENING LOCATION
E/S4 DOOR END WALL ELEVATION
1/4" = 1'-0"

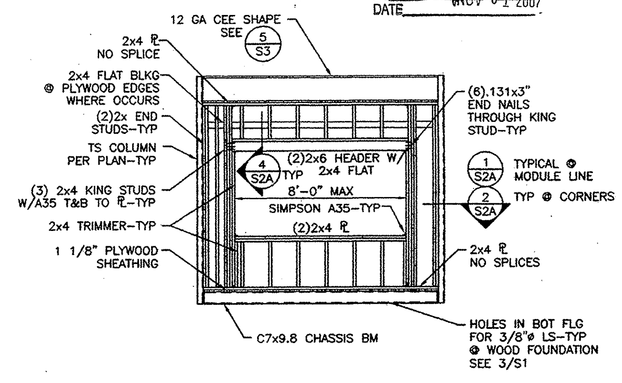

SEE SHEET 1 FOR OPENING LOCATION
F/S4 WINDOW END WALL ELEVATION
1/2" = 1'-0"

THESE DRAWINGS AND / OR SPECIFICATIONS AND / OR CALCULATIONS FOR THE ITEMS LISTED BELOW HAVE BEEN REVIEWED AND ACCEPTED BY THE UNDERSIGNED ARCHITECT AUTHORIZED TO PREPARE SUCH DRAWINGS IN THIS STATE. THESE DOCUMENTS HAVE BEEN REVIEWED FOR COMPLIANCE WITH THE CALIFORNIA BUILDING STANDARDS CODE AS AMENDED FOR USE IN THE STATE OF CALIFORNIA, CODE OF REGULATIONS AND THE PROJECT SPECIFICATIONS.
THE ITEMS LISTED BELOW ARE ACCEPTABLE FOR INCORPORATION INTO THE CONSTRUCTION OF THE PROJECT DESCRIBED ABOVE. THE ARCHITECT ASSUMES RESPONSIBILITY FOR THE ITEMS LISTED (OR FOR WHICH I HAVE BEEN DESIGNATED RESPONSIBILITY) FOR THIS PORTION OF THE WORK.
A LIST OF ITEMS HAS BEEN REVIEWED AND ACCEPTED. (FOR DSA WHOLE, A LIST OF ALL ITEMS ACCEPTED TO DATE, FOR DSA PARTIAL, THIS WORK)
DATE 9/27/04
2001 CBC
FILE NO. PC

IDENTIFICATION STAMP
DIV. OF THE STATE ARCHITECT
OFFICE OF REGULATION SERVICES
APPLICATION NO.
02-104915
AC ___ FLS ___ SS ___
DATE MAR 22 2005

24 x 40
RELOCATABLE
CLASSROOM

American Modular Systems Inc.
787 Spreckels Ave. Manteca, CA 95336
(209)825-1921 Fax (209)825-7018
americanmodular.com

LICENSED ARCHITECT
No. C 12631
Exp. 3-31-05
STATE OF CALIFORNIA

REGISTERED PROFESSIONAL ENGINEER
Kenneth A. Luttrell
No. 5418
Exp. 3-31-05
Structural Engineer
STATE OF CALIFORNIA

CUSTOMER:

WALL FRAMING ELEVATIONS AND FRAME DETAILS

DATE:	5/30/03
SCALE:	AS NOTED
DRAWN BY:	REM
DESIGNED BY:	MDB
CHECKED BY:	KAL
SERIAL NO.	

REVISIONS

NO	DATE	DESCRIPTION	NO	DATE	DESCRIPTION
△			△		
△			△		
△			△		
△			△		

PROJECT No. 02156-01

SHEET No. S4

P:\02156\01\ACAD\STRU\S4.dwg Time:Jun03,2003-09:45am Login:lawrence; Dimscale:48 LTScale:24