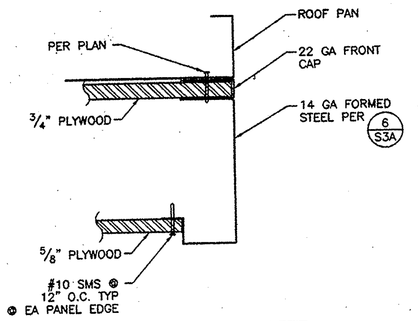

ALT ENCLOSED SOFFIT W/ PLYWOOD DECKING
DETAIL
5/S3A 3" = 1'-0"

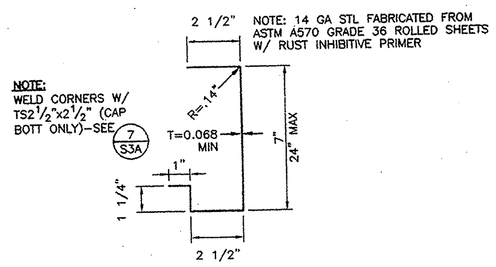

14 GA FORMED STEEL CEE ALT ENCLOSED SOFFIT
DETAIL
6/S3A 3" = 1'-0"

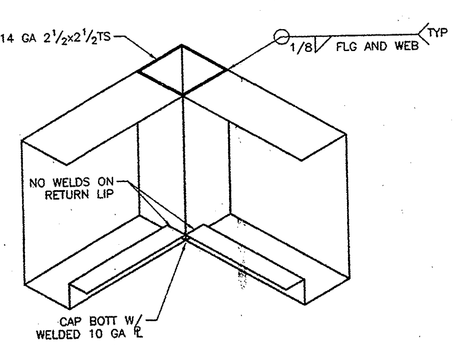

ALT ENCLOSED SOFFIT STL PROFILE
DETAIL
7/S3A NO SCALE

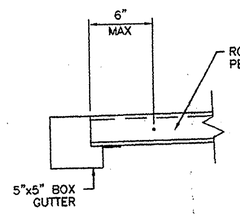

DETAIL
8/S3A NO SCALE

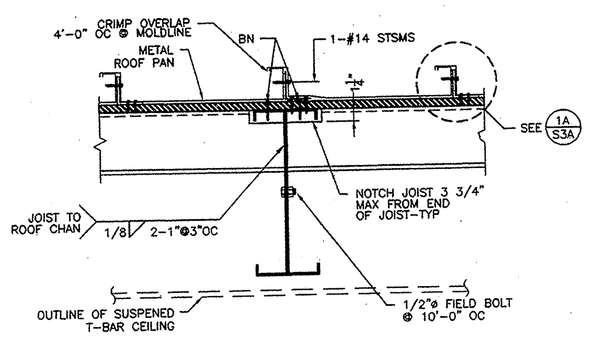

ALT W/ ROOF PLYWOOD SHTHG
DETAIL
3A/S3A 1 1/2" = 1'-0"

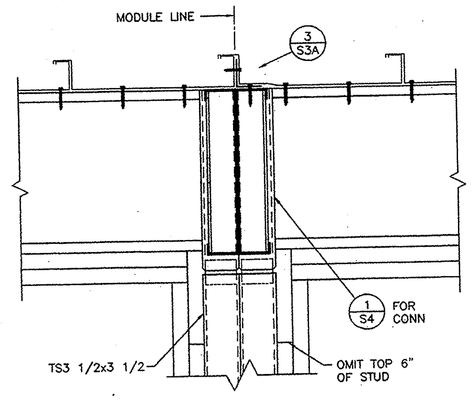

DETAIL
4/S3A 1 1/2" = 1'-0"

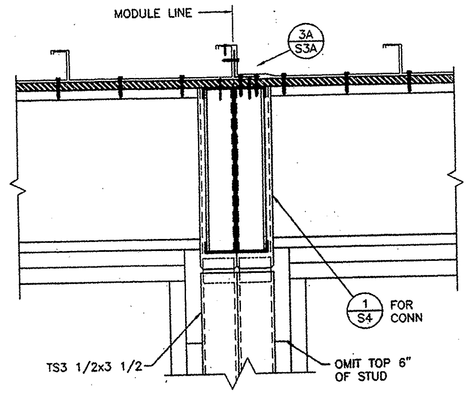

ALT W/ PLYWOOD DECKING
DETAIL
4A/S3A 1 1/2" = 1'-0"

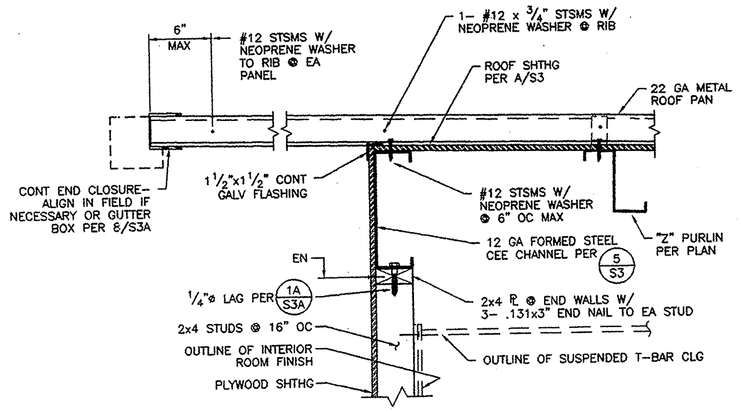

ALT W/ PLYWOOD SHTHG (2'-0" OVERHANG DETAIL SIM)
5'-0" OVERHANG DETAIL
2A/S3A 1 1/2" = 1'-0"

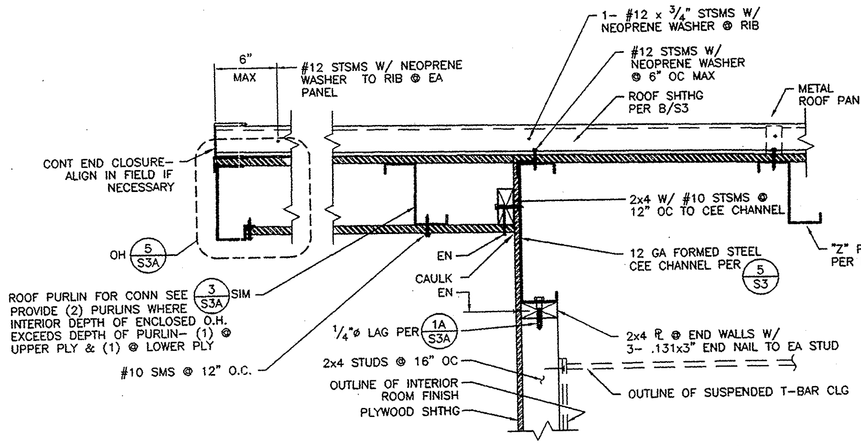

ALTERNATE ENCLOSED SOFFIT & ROOF PLYWOOD (2'-0" OVERHANG DETAIL SIM)
5'-0" OVERHANG DETAIL
2B/S3A 1 1/2" = 1'-0"

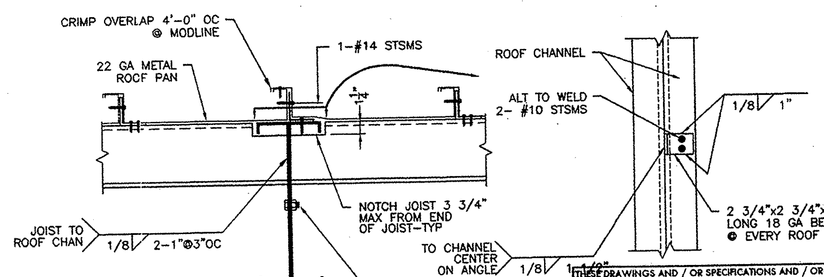

DETAIL
3/S3A 1 1/2" = 1'-0"

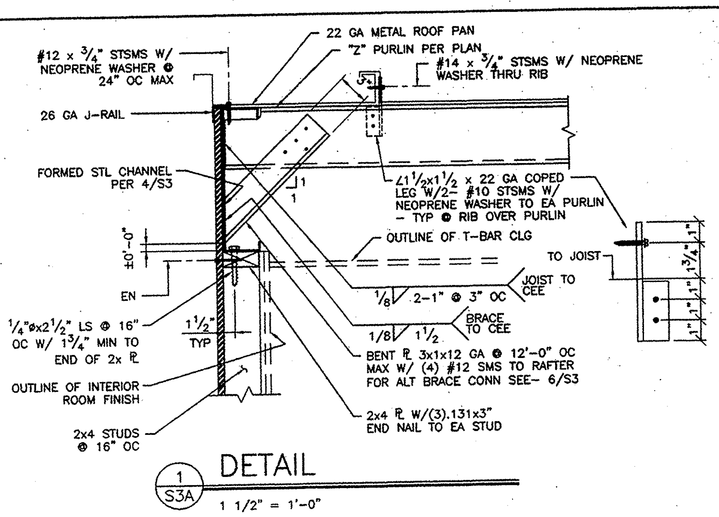

DETAIL
1/S3A 1 1/2" = 1'-0"

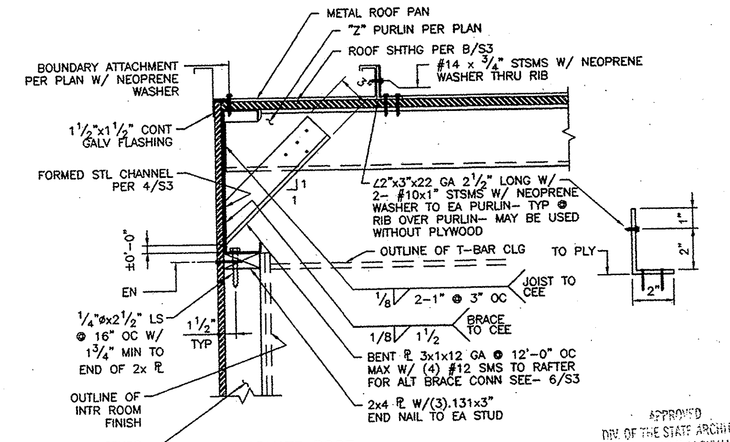

ALTERNATE ROOF W/ PLYWOOD SHEATHING
DETAIL
1A/S3A 1 1/2" = 1'-0"

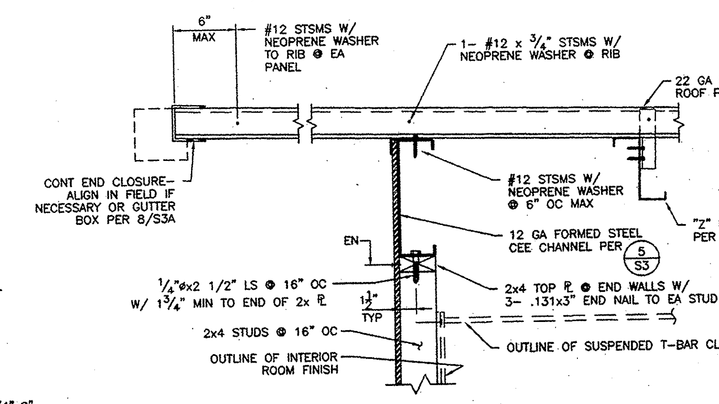

(2'-0" OVERHANG DETAIL SIM)
5'-0" OVERHANG DETAIL
2/S3A 1 1/2" = 1'-0"

APPROVED
DIV. OF THE STATE ARCHITECT
LOS ANGELES BASIN REGIONAL OFFICE
AC ___ FLS ___ SS ___
APPL. NO. 105168 DATE 10/20/04

THESE DRAWINGS AND / OR SPECIFICATIONS AND / OR CALCULATIONS FOR THE ITEMS LISTED BELOW HAVE BEEN PREPARED BY OTHER DESIGN PROFESSIONALS WHO ARE LICENSED AND AUTHORIZED TO PREPARE SUCH DRAWINGS IN THIS STATE. THESE DOCUMENTS HAVE BEEN EXAMINED AND HAVE BEEN FOUND TO MEET THE APPROPRIATE REQUIREMENTS OF TITLE 24, CALIFORNIA CODE OF REGULATIONS AND THE PROJECT SPECIFICATIONS.
THE ITEMS LISTED BELOW ARE ACCEPTABLE FOR INCORPORATION INTO THE CONSTRUCTION OF THIS PROJECT FOR WHICH I AM THE INDIVIDUAL DESIGNATED TO BE GENERALLY RESPONSIBLE (OR FOR WHICH I HAVE BEEN DELEGATED RESPONSIBILITY) FOR THIS PORTION OF THE WORK.
A LIST OF ITEMS HAS BEEN REVIEWED AND ACCEPTED. (FOR DRAWINGS, A LIST OF ALL ACCEPTED DRAWINGS ARE ATTACHED. SHEET NO.: 7-7
LICENSED ARCHITECT C-18824 STATE OF CALIFORNIA
7/27/04
STEVEN J. CORBIN, AIA DATE

IDENTIFICATION STAMP
DIV. OF THE STATE ARCHITECT
APP03 111193
AC FLS SS
DATE NOV 01 2007

2001 CBC
FILE NO. PC
IDENTIFICATION STAMP
DIV. OF THE STATE ARCHITECT
OFFICE OF REGULATION SERVICES
APPLICATION NO.
02-104915
AC FLS SS
DATE JUL 02 2003

24 x 40
RELOCATABLE
CLASSROOM

AMS
American Modular Systems Inc.
787 Sprecklels Ave. Manteca, CA 95336
(209)825-1921 Fax (209)825-7018
americanmodular.com

LICENSED ARCHITECT No. C 12639 Exp. 5-31-05 STATE OF CALIFORNIA
REGISTERED PROFESSIONAL ENGINEER Kenneth A. Lutfiyya No. 1418 EXP. 3-31-05 Structural Engineer STATE OF CALIFORNIA

CUSTOMER:

ROOF SECTIONS AND DETAILS

DATE:	5/30/03
SCALE:	AS NOTED
DRAWN BY:	REM
DESIGNED BY:	MDB
CHECKED BY:	KAL
SERIAL NO.	

REVISIONS

NO	DATE	DESCRIPTION	NO	DATE	DESCRIPTION

PROJECT No. 02156-01

SHEET No. S3A

P:\02156\01\ACAD\STRU\S3a.dwg Time:Jun03,2003-09:45am Login:lawrence| Dimscale:8 LTScale:4