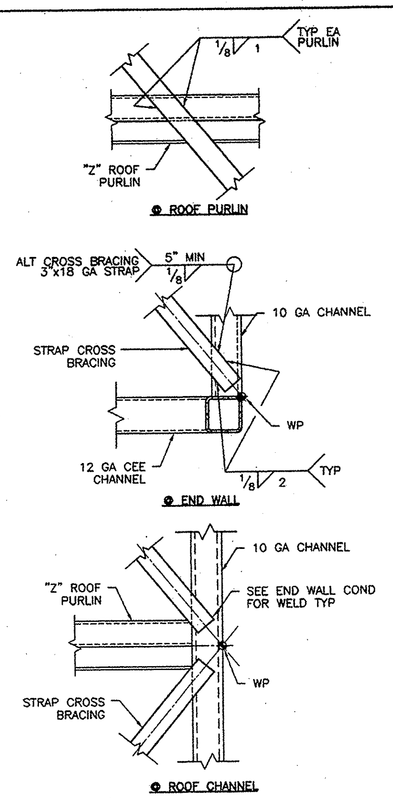

1 S3 CROSS BRACING DETAIL
1 1/2" = 1'-0"

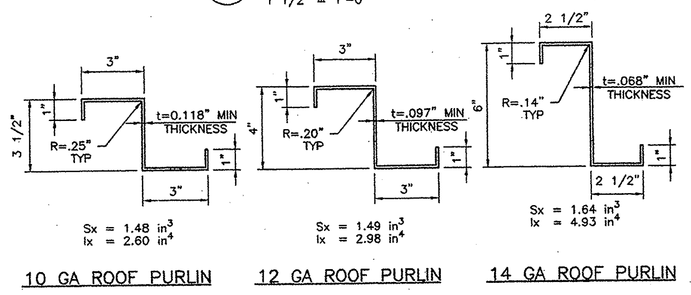

JOIST FABRICATED FROM ASTM A570 GRADE 36, HOT ROLLED SHEETS. JOISTS TO BE GIVEN A RUST INHIBITIVE COATING.

2 S3 DETAIL
3" = 1'-0"

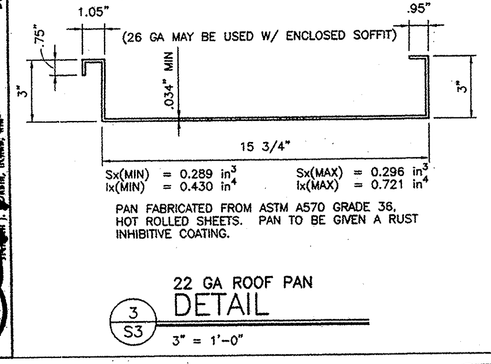

PAN FABRICATED FROM ASTM A570 GRADE 36, HOT ROLLED SHEETS. PAN TO BE GIVEN A RUST INHIBITIVE COATING.

3 S3 22 GA ROOF PAN DETAIL
3" = 3'-0"

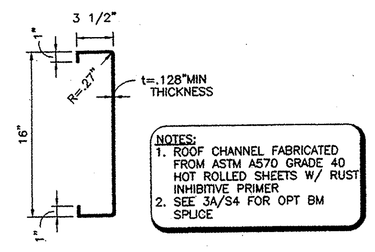

NOTES:
1. ROOF CHANNEL FABRICATED FROM ASTM A570 GRADE 40 HOT ROLLED SHEETS W/ RUST INHIBITIVE PRIMER
2. SEE 3A/S4 FOR OPT BM SPLICE

PROPERTIES:
A = 3.212 in2
Sx = 13.85 in3
Ix = 110.8 in4

4 S3 10 GA ROOF CHANNEL DETAIL
1 1/2" = 1'-0"

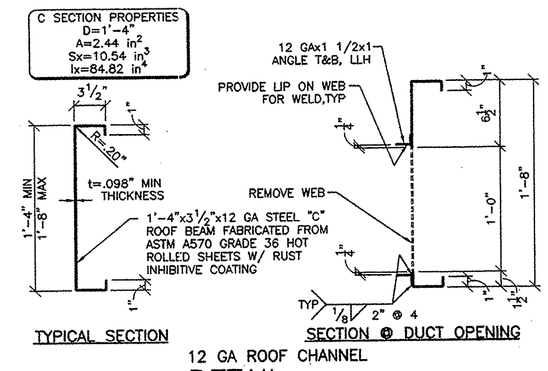

5 S3 12 GA ROOF CHANNEL DETAIL
1 1/2" = 1'-0"

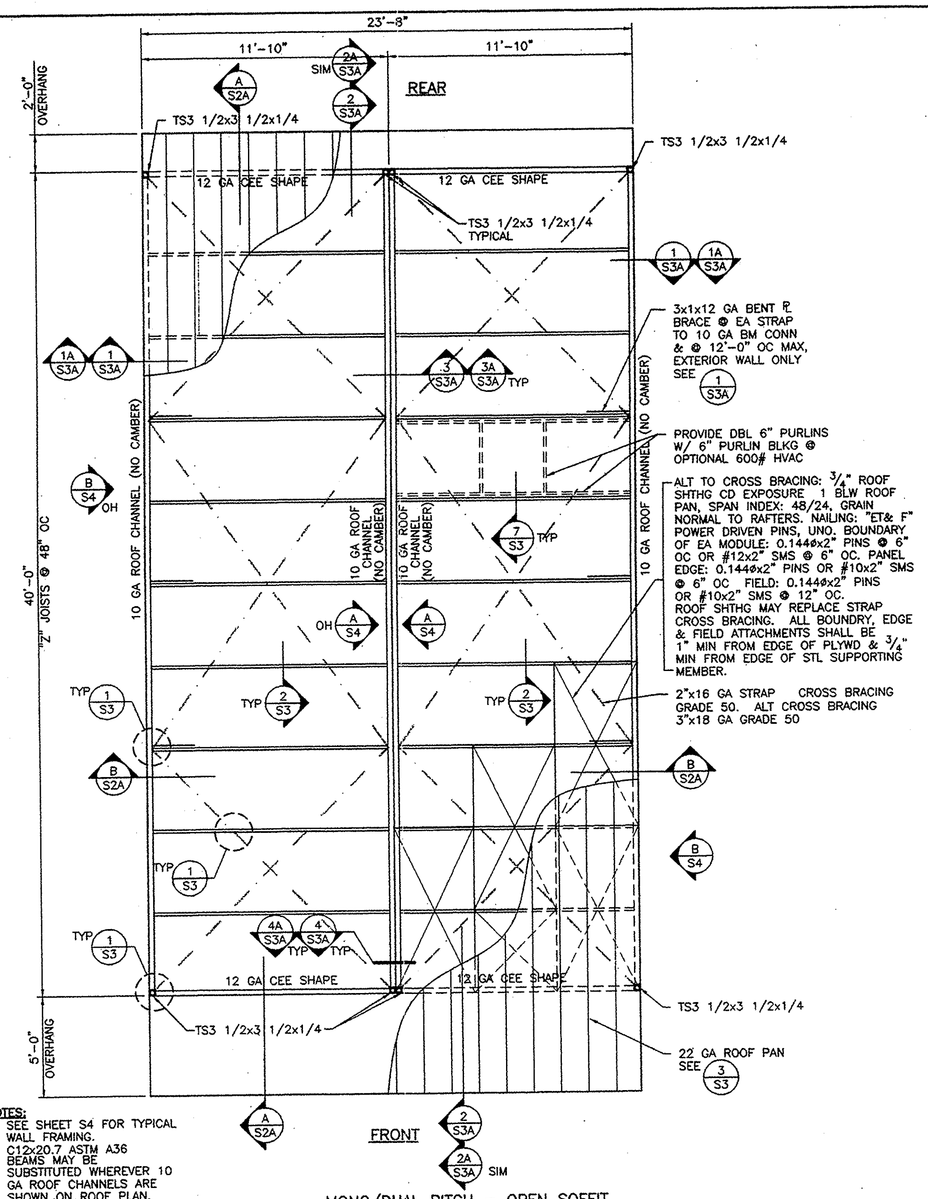

NOTES:
1. SEE SHEET S4 FOR TYPICAL WALL FRAMING.
2. C12x20.7 ASTM A36 BEAMS MAY BE SUBSTITUTED WHEREVER 10 GA ROOF CHANNELS ARE SHOWN ON ROOF PLAN.

A S3 MONO/DUAL PITCH – OPEN SOFFIT ROOF FRAMING PLAN
1/4" = 1'-0"

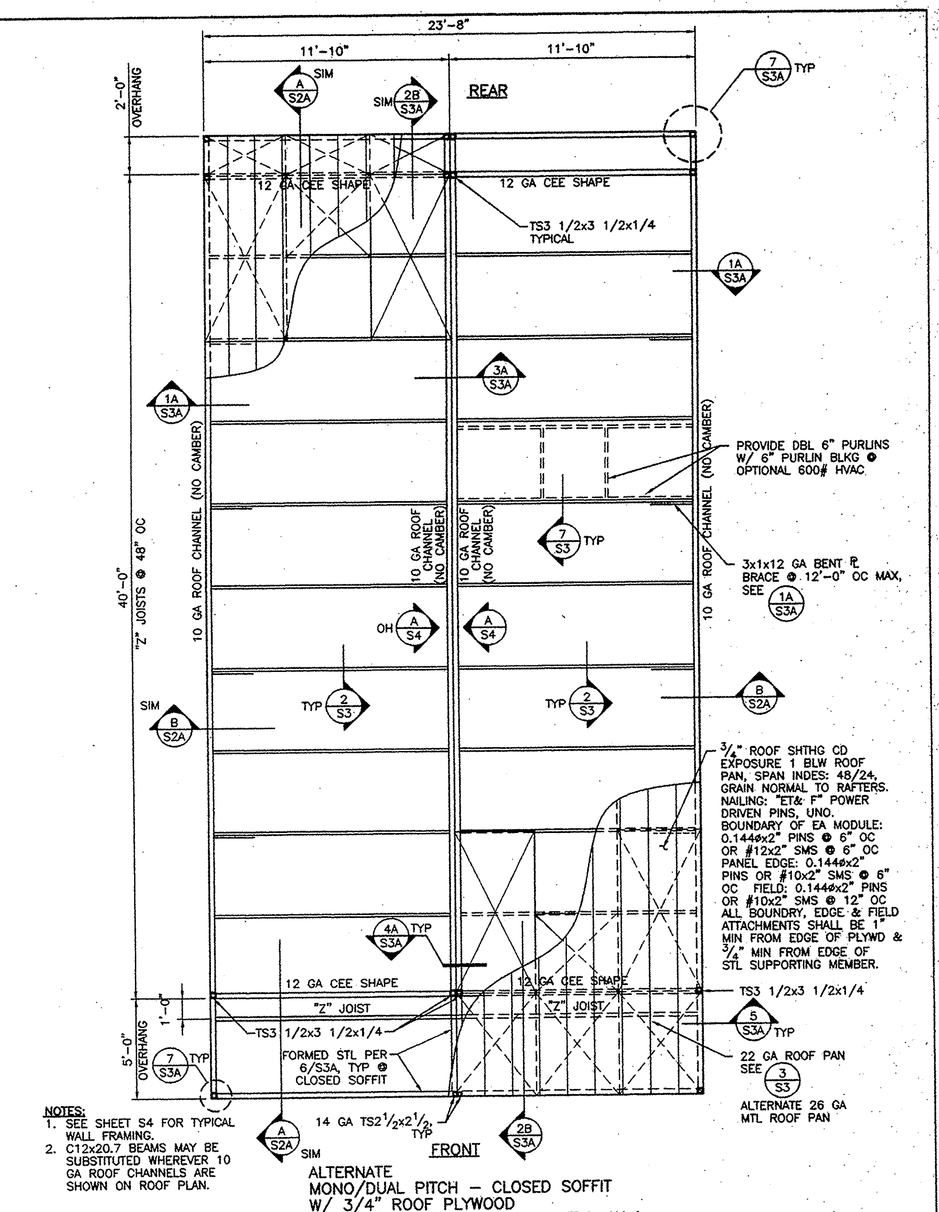

NOTES:
1. SEE SHEET S4 FOR TYPICAL WALL FRAMING.
2. C12x20.7 BEAMS MAY BE SUBSTITUTED WHEREVER 10 GA ROOF CHANNELS ARE SHOWN ON ROOF PLAN.

B S3 ALTERNATE MONO/DUAL PITCH – CLOSED SOFFIT W/ 3/4" ROOF PLYWOOD ROOF FRAMING PLAN
1/4" = 1'-0"

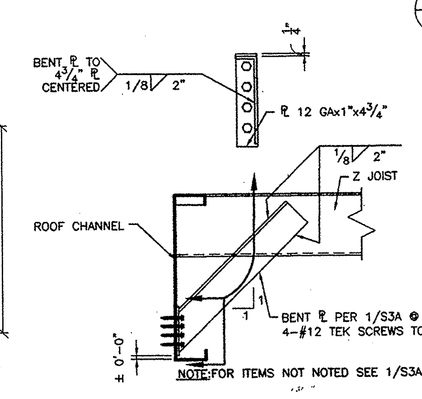

6 S3 DETAIL
1 1/2" = 1'-0"

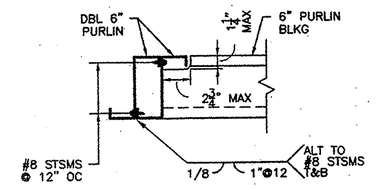

7 S3 DETAIL
1 1/2" = 1'-0"

IDENTIFICATION STAMP
DIV. OF THE STATE ARCHITECT
APP03 111193
AC ___ FLS ___ SS ___
DATE NOV 01 2007

APPROVED
DIV. OF THE STATE ARCHITECT
LOS ANGELES BASIN REGIONAL OFFICE
AC ___ F/LS ___ SS ___
APPL. NO. 105168 DATE 6/20/04

2001 CBC
FILE NO. PC

IDENTIFICATION STAMP
DIV. OF THE STATE ARCHITECT
OFFICE OF REGULATION SERVICES
APPLICATION NO.
02-104915
AC ___ FLS ___ SS ___
DATE JUL 0 2 2003

THESE DRAWINGS AND / OR SPECIFICATIONS AND / OR CALCULATIONS FOR THE ITEMS LISTED BELOW HAVE BEEN PREPARED BY PERSONS NOT EMPLOYED BY THE STATE OF CALIFORNIA AUTHORIZED TO PREPARE SUCH DRAWINGS IN THIS STATE. THESE DOCUMENTS HAVE BEEN REVIEWED AND ACCEPTED BY THE UNDERSIGNED AS CONFORMING TO THE CALIFORNIA CODE OF REGULATIONS AND THE PROJECT SPECIFICATIONS.
THE ITEMS LISTED BELOW ARE ACCEPTABLE FOR INCORPORATION INTO THE CONSTRUCTION OF THE SUBJECT PROJECT. THE ARCHITECT OR ENGINEER OF RECORD IS RESPONSIBLE (OR FOR WHICH I HAVE BEEN DELEGATED RESPONSIBILITY) FOR THE PORTION OF THE WORK.
A LIST OF ITEMS HAS BEEN REVIEWED, AND SHEET NO.'S S3 DRAWINGS, A SET OF ALL CALCS, DATED 06/30/03 ARE ATTACHED.
DATE

24 x 40
RELOCATABLE
CLASSROOM

American Modular Systems Inc.
767 Speckels Ave, Manteca, CA 95336
(209)825-1921 Fax (209)825-7018
americanmodular.com

LICENSED ARCHITECT
RANDOLPH WRIGHT CHANNEL
No. C 12631
Exp. 6-8-05
STATE OF CALIFORNIA

REGISTERED PROFESSIONAL ENGINEER
Kenneth A. Luttrell
No. 1416
Exp. 3-31-05
Structural Engineer
STATE OF CALIFORNIA

CUSTOMER:

ROOF FRAMING PLAN AND DETAILS

DATE: 5/30/03
SCALE: AS NOTED
DRAWN BY: REM
DESIGNED BY: MDB
CHECKED BY: KAL
SERIAL NO.

REVISIONS

NO	DATE	DESCRIPTION	NO	DATE	DESCRIPTION

PROJECT No. 02156-01

SHEET No. S3

P:\02156\01\ACAD\STRU\S3.dwg Time:Jun03,2003-08:44am Login:lawrence Dimscale:8 LTScale:24