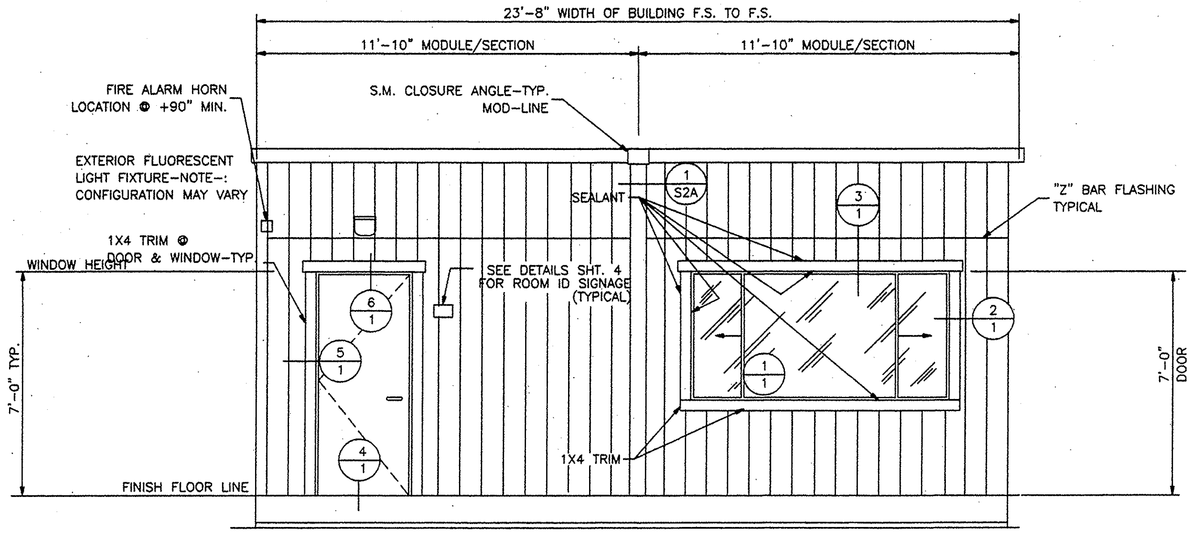

FRONT/ENTRY ELEVATION (D)

SCALE:3/8"=1'-0"

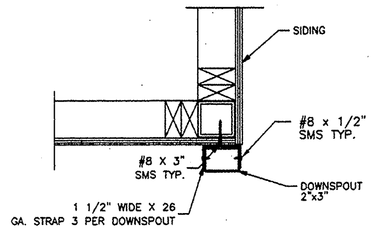

DOWNSPOUT DETAIL (3/2)

1 1/2"=1'-0"

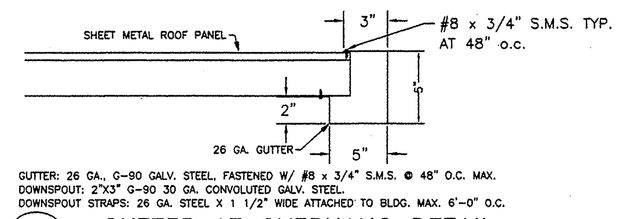

GUTTER AT OVERHANG DETAIL (2/2)

ROOM ID SIGNAGE

SEE SHEET 4 DETAILS E/4 & 1/4

NOT A PART OF THIS CONTRACT (NOT PROVIDED BY A.M.S.)

NOTE:
WHERE PERMANENT IDENTIFICATION IS PROVIDED FOR ROOMS OR SPACES, RAISED LETTERS SHALL BE PROVIDED AND SHALL BE ACCOMPANIED BY BRAILLE IN CONFORMANCE WITH THE FOLLOWING:
CALIFORNIA
CONTRACTED GRADE 2 BRAILLE SHALL BE USED. DOTS SHALL BE 1/10 INCH ON CENTER IN EACH CELL WITH 2/10 INCH SPACE BETWEEN CELLS. DOTS SHALL BE RAISED A MINIMUM 1/40 INCH ABOVE BACKGROUND. WITH ROUNDED OR DOMED EDGES
SIGNS SHALL BE INSTALLED ON WALL ADJACENT TO LATCH OUTSIDE OF DOOR. WHERE THERE IS NO SPACE ON THE LATCH SIDE, SIGNS SHALL BE PLACED ON THE NEAREST ADJACENT WALL, PREFERABLY ON THE RIGHT. MOUNTING HEIGHT SHALL BE 60" ABOVE THE FINISH FLOOR TO THE CENTER TACTILING (i.e. BRAILLE)

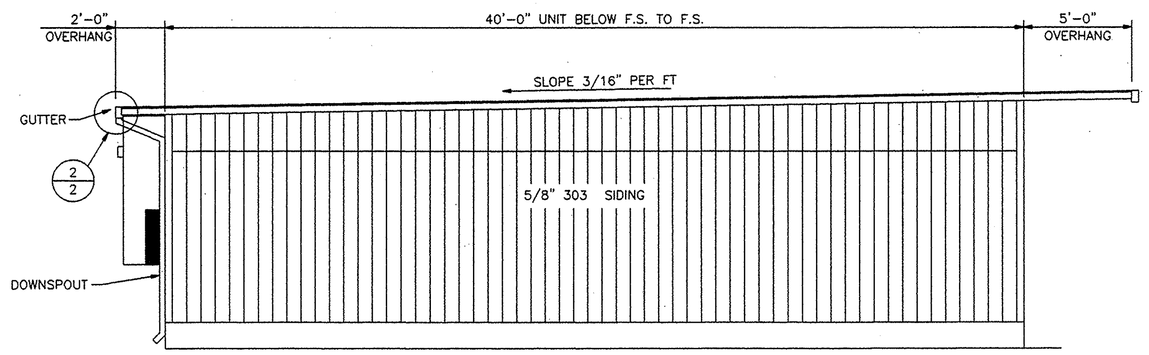

LEFT SIDE ELEVATION (B)

SCALE:1/4"=1'-0"

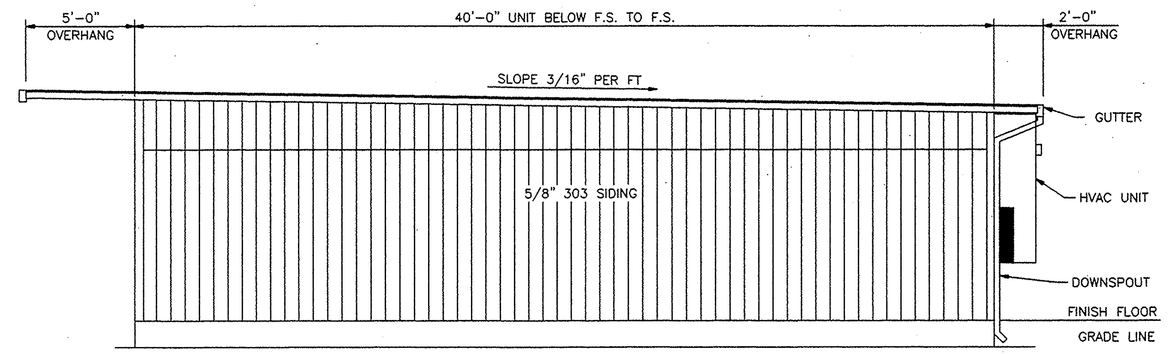

RIGHT SIDE ELEVATION (C)

SCALE:1/4"=1'-0"

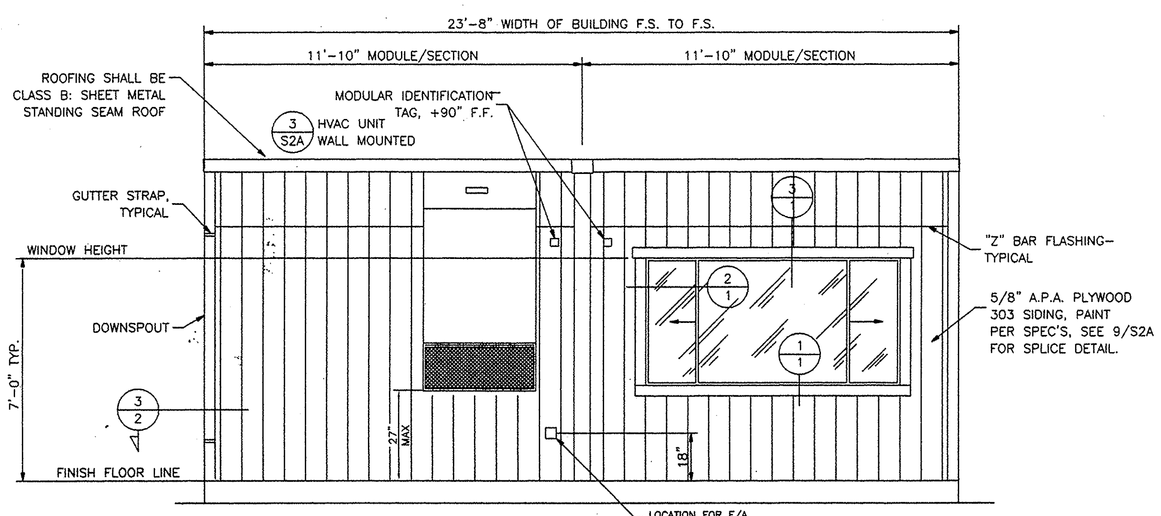

REAR ELEVATION (A)

SCALE:3/8"=1'-0"

THESE DRAWINGS AND / OR SPECIFICATIONS AND / OR CALCULATIONS FOR THE ITEMS LISTED BELOW HAVE BEEN PREPARED BY OTHER DESIGN PROFESSIONALS WHO ARE LICENSED AND AUTHORIZED TO PREPARE SUCH DRAWINGS IN THIS STATE. THESE DOCUMENTS HAVE BEEN EXAMINED AND HAVE BEEN FOUND TO MEET THE APPROPRIATE REQUIREMENTS OF TITLE 24, CALIFORNIA CODE OF REGULATIONS AND THE PROJECT SPECIFICATIONS
THE ITEMS LISTED BELOW ARE ACCEPTABLE FOR INCORPORATION INTO THE CONSTRUCTION OF THIS PROJECT FOR WHICH I AM THE INDIVIDUAL DESIGNATED TO BE GENERALLY RESPONSIBLE (OR FOR WHICH I HAVE BEEN DELEGATED RESPONSIBILITY) FOR THIS PORTION OF THE WORK.
A LIST OF ITEMS HAS BEEN REVIEWED AND ACCEPTED. (FOR DRAWINGS, A LIST OF ALL ACCEPTED DRAWINGS ARE ATTACHED, SEE SHEET NO./S- /).

REGISTERED ARCHITECT No. C-28288 STATE OF CALIFORNIA
STEPHEN J. CORBIN, ACSA, AIA — DATE 9/29/04

APPROVED
DIV. OF THE STATE ARCHITECT
LOS ANGELES BASIN REGIONAL OFFICE
AC ___ FLS ___ SS ___
APPL NO. 105168 DATE 10/20/04

IDENTIFICATION STAMP
DIV. OF THE STATE ARCHITECT
APP03 111193
AC FLS SS
DATE NOV 01 2004

FILE NO. PC
IDENTIFICATION STAMP
DIV. OF THE STATE ARCHITECT
OFFICE OF REGULATION SERVICES
AC.___ FLS.___ SS.___
DATE

BASED ON PC# 02-104915

24 X 40
RELOCATABLE
CLASSROOMS

AMS
American Modular Systems Inc.
787 Spreckels Ave. Manteca, CA 95336
(209)825-1921 Fax (209)825-7018
americanmodular.com

LICENSED ARCHITECT THOMAS PATRICK CAVANAUGH No. C 12831 Reg. STATE OF CALIFORNIA

CUSTOMER:
BAKERSFIELD CITY SCHOOL DISTRICT
CAROLINE HARRIS SCHOOL

EXTERIOR ELEVATIONS

DATE: 09-28-04
SCALE: NONE
DRAWN BY: M.H.
CHECKED BY:
CHECKED BY:
SERIAL NO.

REVISIONS

NO	DATE	DESCRIPTION	NO	DATE	DESCRIPTION
△			△		
△			△		
△			△		
△			△		

PROJECT No.

SHEET No. 2