GENERAL NOTES:

GENERAL NOTES: NG_CBC95

1. ALL CONSTRUCTION SHALL COMPLY WITH THE 1995 EDITION OF THE CALIFORNIA BUILDING CODE (CBC), CCR TITLE 24, PART 2. [MODIFICATIONS TO THE 1994 UNIFORM BUILDING CODE (UBC), UBC STANDARDS AND UBC RECOGNIZED STANDARDS ALL UBC RECOGNIZED STANDARDS AS APPLICABLE ARE REQUIRED FOR THIS PROJECT.] ALSO COMPLY WITH ADMINISTRATIVE REQUIREMENTS OF CCR TITLE 24, PART 1, CHAPTER 4, GROUP 1, (LATEST REVISION).
2. THE CONTRACTOR SHALL BE RESPONSIBLE FOR THE SAFETY OF THE BUILDING DURING CONSTRUCTION AND SHALL DESIGN AND PROVIDE ADEQUATE SHORING AND BRACING DURING CONSTRUCTION. CONTRACTOR SHALL COMPLY WITH APPLICABLE SAFETY REGULATIONS.
3. DETAILS NOT SPECIFICALLY SHOWN SHALL BE SIMILAR TO DETAILS FOR SIMILAR CONSTRUCTION SHOWN ON THESE DRAWINGS. THE CONTRACTOR ADMITS AND AGREES THAT THE CONTRACT DOCUMENTS EXHIBIT THE INTENT AND PURPOSE OF THE OWNER IN REGARD TO THE WORK, AND THAT THEY ARE NOT COMPLETE IN EVERY DETAIL AND ARE TO BE CONSIDERED AS SHOWING THE PURPOSE AND INTENT ONLY; AND THE CONTRACTOR FURTHER AGREES TO FURNISH ALL LABOR OR MATERIAL FOR ANY DETAIL THAT IS NECESSARY TO CARRY OUT SAID INTENT AND PURPOSE OF THE CONTRACT DOCUMENTS WITHOUT EXTRA CHARGE TO THE OWNER.
4. THE CONTRACTOR SHALL COORDINATE THE WORK OF ALL TRADES AND SHALL CHECK ALL DIMENSIONS. ANY DISCREPANCIES SHALL BE CALLED TO THE ATTENTION OF THE ARCHITECT AND BE RESOLVED BEFORE PROCEEDING WITH THE WORK.
5. NO STRUCTURAL MEMBERS SHALL BE CUT, NOTCHED OR OTHERWISE PENETRATED UNLESS SPECIFICALLY APPROVED BY THE ARCHITECT IN ADVANCE OR SHOWN ON THESE DRAWINGS.
6. TYPICAL DETAILS SHALL APPLY UNLESS SHOWN OTHERWISE ON THE DRAWINGS.
7. WHERE THESE GENERAL NOTES AND THE TYPICAL DETAILS ARE IN CONFLICT WITH THE SPECIFICATIONS, THESE GENERAL NOTES AND THE TYPICAL DETAILS SHALL GOVERN.
8. PROV... OPENINGS, CURBS, BLOCKING, FRAMING AND/OR SUPPORTS FOR ITEMS INDICATED ON ARCHITECTURAL, MECHANICAL, ELECTRICAL, OTHER DRAWINGS OR SPECIFICATIONS INCLUDED IN THE CONSTRUCTION DOCUMENTS.
9. REFER TO ARCHITECTURAL DRAWINGS FOR DIMENSIONS AND OTHER INFORMATION NOT SPECIFICALLY SHOWN ON STRUCTURAL DRAWINGS.
10. ALL ELEVATIONS ARE REFERENCED FROM TOP OF FINISH FLOOR ELEVATION. (0'-0" ELEV. IS @ TOP OF FLOOR P.W.)
11. PROVIDE INSPECTIONS, TESTS, AND REPORTS IN ACCORDANCE WITH THE 1995 CBC AND CCR TITLE 24, PART 1, CHAPTER 4, GROUP 1.
12. IN ADDITION TO CONTINUOUS PROJECT INSPECTION, THE FOLLOWING SPECIAL INSPECTIONS SHALL BE REQUIRED, AS A MINIMUM:
    A. INSPECTION OF ALL WELDING FOR STRUCTURAL STEEL, PER CBC SECTION 1701A.5.5 AND 1703A. SEE ALSO REQUIREMENTS OF CBC SECTION 2212A.5.
    B. INSPECTION OF INSTALLATION OF HIGH STRENGTH BOLTS, PER CBC SECTIONS 1701A.5.6 AND 2212A.6.
    C. INSPECTION FOR CONCRETE AND CONCRETE REINFORCEMENT PLACEMENT, PER TITLE 24, PART 1, CHAPTER 4, GROUP 1 AND CBC SECTIONS 1701A.5.1, 2, & 4.
13. ALL REQUIRED INSPECTIONS AND TESTS ARE THE RESPONSIBILITY OF THE OWNER. ALL INSPECTORS SHALL PROVIDE REPORTS AS REQUIRED BY CCR TITLE 24, PART 1, CHAPTER 4, GROUP 1.
14. DIMENSIONS AND ELEVATIONS SHOWN ARE APPROXIMATE AND ARE PROVIDED AS AN AID IN INTERPRETING THE DRAWINGS ONLY. DIMENSIONS AND ELEVATIONS MUST BE VERIFIED WITH ARCHITECTURAL DRAWINGS. IN THE EVENT OF CONFLICT, DIMENSIONS AND ELEVATIONS SHOWN ON ARCHITECTURAL DRAWINGS SHALL GOVERN. DRAWING SCALES GIVEN ARE APPROXIMATE – **DO NOT SCALE PLANS OR DETAILS.**
15. ALL BOLTS EMBEDDED IN CONCRETE SHALL BE ASTM A307 TYPE A OR C (INCLUDING SUPPLEMENTARY REQUIREMENT S1) UNLESS NOTED OTHERWISE ON DRAWINGS.
16. WHEN MODULE IS RELOCATED – DO NOT REINSTALL NAILS OR SCREWS IN EXISTING HOLES.

WOOD: NW_CBC95

1. STRUCTURAL FRAMING SHALL BE DOUGLAS FIR – LARCH GRADED IN ACCORDANCE WITH THE WESTERN LUMBER GRADING RULES OF THE WESTERN WOOD PRODUCTS ASSOCIATION OR STANDARD GRADING RULES NO. 17 OF THE WEST COAST LUMBER INSPECTION BUREAU, LATEST REVISIONS. WOOD MEMBERS SHALL HAVE A MAXIMUM MOISTURE CONTENT OF 19% AT TIME OF INSTALLATION. DOUGLAS FIR SOUTH IS NOT ALLOWED. EACH PIECE SHALL BE GRADE MARKED AND NO PIECE MAY FALL BELOW THE GRADES INDICATED. GRADES SHALL BE AS FOLLOWS UNLESS NOTED OTHERWISE ON THE DRAWINGS.
   ALL FRAMING EXCEPT AS NOTED ---------- NO. 2
   BLOCKING ------------------------ NO. 3 (OR BETTER)
2. ALL PLYWOOD SHOWN ON THESE DRAWINGS SHALL BE C-D, U.O.N., WITH EXTERIOR GLUE IN ACCORDANCE WITH U.S. PRODUCT STANDARD PS 1-83 (UBC STANDARD 23-2). ALL PANELS SHALL BE MARKED WITH AN APA GRADE MARK WITH A PANEL SPAN RATING IN ACCORDANCE WITH CBC TABLE NO. 23A-I-S-1. USE 4'x8' PANELS, MINIMUM, EXCEPT AT BOUNDARIES AND FRAMING CHANGES WHERE THE MINIMUM PANEL DIMENSION SHALL BE 24" AT ROOFS OR FLOORS UNLESS PANEL IS SUPPORTED AT ALL FOUR SIDES BY FRAMING OR BLOCKING. MINIMUM PANEL DIMENSION AT WALLS SHALL BE 12". TECO RESEARCH & TESTING AND PITTSBURG TESTING LABS ARE ACCEPTABLE ALTERNATIVES TO APA FOR PLYWOOD APPROVAL.
3. WOOD INDICATED ON THE DRAWINGS TO BE PRESSURE PRESERVATIVE TREATED (PPT) SHALL BE TREATED IN ACCORDANCE WITH AWPB PROCEDURE LP-2 AND RELATED AWPA STANDARDS UNLESS OTHERWISE NOTED. FOUNDATION PADS AND OTHER WOOD WITH GROUND CONTACT SHALL BE TREATED IN ACCORDANCE WITH AWPB PROCEDURE LP-22 AND RELATED AWPA STANDARDS. ALL CUTS, HOLES AND NOTCHES SHALL BE TREATED. ALL TREATED MEMBERS SHALL BE IDENTIFIED WITH STAMP INDICATING TREATMENT PROCESS.
4. BOLTS FOR TIMBER CONNECTIONS SHALL BE FULL DIAMETER BODY AND PER THE REQUIREMENTS OF ASTM A307, GRADE A AND ANSI/ASME STANDARD B18.2.1, UNLESS OTHERWISE NOTED. BOLTS SHALL BE INSTALLED IN ACCORDANCE WITH THE REQUIREMENTS OF THE 1995 CALIFORNIA BUILDING CODE (CBC), CHAPTER 23A, AND CBC SECTION 2336 AND SHALL HAVE A MINIMUM BENDING YIELD STRENGTH OF 45,000 PSI. BOLT HOLES SHALL BE 1/16 INCH LARGER THAN BOLT DIAMETER. RE-TIGHTEN BOLTS BEFORE CLOSING IN WORK.
5. LAG SCREWS SHALL CONFORM TO ANSI/ASME STANDARD B18.2.1 OR CBC TABLE 23-III-UU, THE REQUIREMENTS OF THE 1995 CALIFORNIA BUILDING CODE, CHAPTER 23A, AND CBC SECTION 2337. HOLES FOR LAG SCREW SHANKS SHALL BE BORED THE SAME DEPTH AND DIAMETER AS THE SHANK. THE REMAINING DEPTH OF PENETRATION OF THE SCREW SHALL BE BORED TO 70% OF THE SHANK DIAMETER. PROVIDE FULL DIAMETER BODY, STEEL LAG SCREWS WITH MINIMUM BENDING YIELD STRENGTHS PER TABLES 23-III-T AND 23-III-U IN THE 1995 CBC.
6. PROVIDE MALLEABLE IRON WASHERS OR STANDARD CUT PLATE WASHERS UNDER NUTS AND BOLT OR LAG SCREW HEADS WHICH BEAR ON WOOD.
7. WOOD SCREWS SHALL CONFORM TO ANSI/ASME STANDARD B18.6.1, THE REQUIREMENTS OF THE 1995 CALIFORNIA BUILDING CODE, CHAPTER 23A, AND CBC SECTION 2339. WOOD SCREWS SHALL BE STEEL, WITH MINIMUM BENDING YIELD STRENGTHS PER TABLES 23-III-DD AND 23-III-EE IN THE 1995 CBC AND CUT THREADS. LEAD HOLES FOR SCREWS SHALL BE 7/8 OF THE SHANK DIAMETER AT THE SHANK (UNTHREADED PORTION) AND 7/8 OF THE THREAD ROOT DIAMETER FOR THE THREADED PORTION OF THE SCREW.
8. WOOD MEMBERS SHALL BE CUT OR NOTCHED ONLY AS SHOWN ON THE STRUCTURAL DRAWINGS.
9. WHEN REQUIRED NAILING TENDS TO SPLIT WOOD MEMBERS, NAIL HOLES SHALL BE PRE-BORED TO 3/4 OF THE NAIL DIAMETER.
10. STRUCTURAL NAILING SHALL BE WITH FULL HEAD COMMON STEEL WIRE NAILS PER FEDERAL SPECIFICATION FF-N-105B, ALL REQUIREMENTS OF THE 1995 CALIFORNIA BUILDING CODE, CHAPTER 23A, AND CBC SECTION 2340. NAILING NOT SPECIFICALLY INDICATED SHALL COMPLY WITH CBC TABLE 23A-I-Q. NAILS EXPOSED TO WEATHER OR IN PRESSURE PRESERVATIVE TREATED MEMBERS SHALL BE HOT DIP GALVANIZED. NAILS SHALL BE ELECTROGALVANIZED ELSEWHERE. PROVIDE NAILS WITH MINIMUM BENDING YIELD STRENGTHS PER TABLE 23-III-II OR 23-III-MM IN THE 1995 CBC. IF MACHINE NAILING IS UTILIZED FOR THIS PROJECT, CONTRACTOR SHALL COMPLY WITH ALL REQUIREMENTS OF CCR TITLE 24, PART 2, SECTIONS 2311A.3.3 AND 2314A.3. MACHINE NAILING IS SUBJECT TO APPROVAL BY THE STRUCTURAL ENGINEER AND THE DIVISION OF THE STATE ARCHITECT.
11. NAIL EQUIVALENCE: (PROVIDE MINIMUM NAIL LENGTHS AS REQUIRED FOR SPECIFIED PENETRATION, TYP., U.O.N.)
    6d EQUALS .113" DIA. – PROVIDE 1 3/8" MIN. POINT PENETRATION
    8d EQUALS .131" DIA. – PROVIDE 1 1/2" MIN. POINT PENETRATION
    10d EQUALS .148" DIA. – PROVIDE *1 3/4" MIN. POINT PENETRATION
    16d EQUALS .162" DIA. – PROVIDE *2" MIN. POINT PENETRATION
    *1 1/2" AT 2x MEMBERS
12. INFORMATION IN BOX [ ] INDICATES MODEL NUMBER OF CONNECTOR HARDWARE BY THE SIMPSON COMPANY, SAN LEANDRO, CALIFORNIA. INSTALL IN ACCORDANCE WITH THE MANUFACTURER'S INSTRUCTIONS FOR MAXIMUM RATED LOADS, UON. USP LUMBER CONNECTORS, BY UNITED STEEL PRODUCTS COMPANY, LIVERMORE, CALIFORNIA, IN ACCORDANCE WITH ICBO REPORT 2039, ARE ACCEPTABLE ALTERNATES TO SIMPSON CONNECTORS AS SHOWN IN TABLE K/S0.2.
13. EXCEPT WHERE MORE STRINGENT CONSTRUCTION IS SHOWN ON THE DRAWINGS, WOOD CONSTRUCTION SHALL COMPLY WITH CBC SECTION 2326A, CONVENTIONAL LIGHT FRAME CONSTRUCTION PROVISIONS, AS A MINIMUM.

CONCRETE: NC_CBC95

1. CONCRETE SHALL DEVELOP A MINIMUM ULTIMATE COMPRESSIVE STRENGTH OF 3000 PSI AT 28 DAYS IN ACCORDANCE WITH ASTM C31 AND C39. TESTING SHALL BE IN ACCORDANCE WITH CBC SECTION 1905A.6. THREE CYLINDERS FOR STRENGTH TESTS OF EACH CLASS OF CONCRETE PLACED EACH DAY SHALL BE TAKEN BY THE OWNER'S TESTING LABORATORY NOT LESS THAN ONCE A DAY, NOR LESS THAN ONCE FOR EACH 50 CUBIC YARDS OF CONCRETE, NOR LESS THAN ONCE FOR EACH 2000 SQUARE FEET OF SURFACE AREA FOR SLABS AND WALLS. PROVIDE 6% ENTRAINED AIR BY VOLUME WITH ADMIXTURE PER ASTM C260 FOR SITES ABOVE 1500 FEET IN ELEVATION. SEE ALSO CBC SECTION 1904A.
2. ALL CONCRETE SHALL BE CONSOLIDATED BY MECHANICAL VIBRATORS.
3. ALL CONCRETE WORK SHALL CONFORM TO THE REQUIREMENTS OF 1995 CBC (CCR TITLE 24, PART 2) AND ACI STANDARD 318, LATEST REVISION, OF THE AMERICAN CONCRETE INSTITUTE, UNLESS SHOWN OR NOTED OTHERWISE ON THESE DRAWINGS.
4. AGGREGATE SHALL CONFORM TO ASTM C33 AND CBC SECTION 1903A.3. GRADING OF COMBINED AGGREGATE SHALL BE PER TITLE 24, PART 2, TABLE 19A-J. (1" MAX. AGGREGATE)
5. CEMENT SHALL BE ASTM C150, TYPE I OR TYPE II. SEE ALSO REQUIREMENTS OF CBC SECTION 1903A.2.
6. REINFORCING STEEL SHALL BE DEFORMED CONFORMING TO ASTM A615 GRADE 60 UNLESS OTHERWISE NOTED. SEE ALSO REQUIREMENTS OF CBC SECTION 1903A.5.
7. WELDED WIRE FABRIC REINFORCEMENT SHALL CONFORM TO ASTM A185.
8. WELDING OF REINFORCING STEEL SHALL BE PERFORMED ONLY WHERE INDICATED ON THE DRAWINGS AND SHALL BE IN COMPLIANCE WITH ALL REQUIREMENTS OF THE CBC AND THE STRUCTURAL WELDING CODE – REINFORCING STEEL, AWS D 1.4, LATEST REVISION, OF THE AMERICAN WELDING SOCIETY (UBC STANDARD 19-2). PROVIDE WELDING PROCEDURE AND MILL TEST REPORTS FOR ALL REINFORCEMENT TO BE WELDED. REINFORCING WITH C.E. ABOVE 0.75 SHALL NOT BE WELDED. ARCHITECT SHALL APPROVE WELDING PROCEDURE, WELDER QUALIFICATIONS AND MILL TEST REPORTS PRIOR TO EXECUTION OF WELDING. PROVIDE INSPECTION PER CBC CHAPTER 17A AND SECTION 1928A.12.
9. COVERAGE FOR REINFORCING BARS SHALL BE IN ACCORDANCE WITH THE REQUIREMENTS OF THE CBC AND ACI STANDARD 318 UNLESS SHOWN OTHERWISE ON THE DRAWINGS.
10. LAP SPLICES FOR REINFORCING BARS SHALL BE 60 BAR DIAMETERS OR 18" MINIMUM UNLESS SHOWN OTHERWISE ON THE DRAWINGS. WIRE BARS TOGETHER AT LAPS OR SPLICES. STAGGER LAPS IN ADJACENT HORIZONTAL OR SLOPING REINFORCING BARS A MINIMUM OF THE REQUIRED SPLICE LENGTH. HOOKS SHALL BE CBC STANDARD HOOKS PER CCR TITLE 24, PART 2, SECTION 1907A.1 THRU 1907A.3, UNLESS SHOWN OTHERWISE. WELDED WIRE FABRIC SHALL BE SPLICED BY LAPPING A MINIMUM OF 12 INCHES OR TWO CROSS WIRES, WHICHEVER IS GREATER.
11. CONCRETE SHALL BE PLACED IN ACCORDANCE WITH ASTM C94 (UBC STANDARD 19-3) AND ACI STANDARD 304. ALSO COMPLY WITH THE REQUIREMENTS OF CBC SECTION 1905A.7 THRU 1905A.13.
12. ALL EMBEDDED ITEMS SHALL BE PLACED ACCURATELY AND SECURED PRIOR TO BEGINNING CONCRETE PLACEMENT.
13. CONSTRUCTION JOINTS SHALL BE LOCATED SO AS NOT TO IMPAIR THE STRENGTH OF THE STRUCTURE. CONSTRUCTION JOINTS SHALL COMPLY WITH CBC SECTION 1906A.4. LOCATE CONSTRUCTION JOINTS ONLY AS SHOWN ON THE DRAWINGS OR APPROVED IN ADVANCE BY THE STRUCTURAL ENGINEER AND THE DIVISION OF THE STATE ARCHITECT (DSA).
14. PROVIDE SHOP DRAWINGS FOR ALL REINFORCING STEEL TO THE ARCHITECT FOR REVIEW AND APPROVAL PRIOR TO BEGINNING ANY FABRICATION.
15. CONTRACTOR SHALL PREPARE AND SUBMIT CONCRETE MIX DESIGNS TO THE ARCHITECT FOR APPROVAL PRIOR TO PLACEMENT OF ANY CONCRETE. CONCRETE MIX DESIGNS SHALL BE PER CBC SECTION 1905A. ALL CONCRETE MIX DESIGNS SHALL BE SIGNED BY A CIVIL ENGINEER LICENSED IN CALIFORNIA.
16. ALL GROUT SHALL BE NONMETALLIC NON-SHRINK HIGH STRENGTH GROUT BY MASTER BUILDERS OR EQUIVALENT AS APPROVED BY THE STRUCTURAL ENGINEER. UTILIZE PRODUCTS RECOMMENDED BY THE MANUFACTURER FOR EACH APPLICATION AND INSTALL PER MANUFACTURER'S RECOMMENDATIONS.
17. REINFORCING AND EMBEDMENT ITEMS SHALL BE FREE OF EXCESSIVE SCALE OR RUST, DIRT, GREASE, OIL OR ANY OTHER SUBSTANCE THAT WILL IMPAIR BOND WITH CONCRETE.
18. OWNER SHALL PROVIDE SPECIAL INSPECTIONS IN ACCORDANCE WITH CBC CHAPTER 17A FOR THE PLACEMENT OF CONCRETE AND CONCRETE REINFORCEMENT, FOR BOLTS INSTALLED IN CONCRETE, FOR SAMPLING CONCRETE AND FOR REINFORCING STEEL WELDING. OWNER'S INSPECTOR SHALL PROVIDE INSPECTION REPORTS TO THE ARCHITECT, ENGINEER, AND DIVISION OF THE STATE ARCHITECT.
19. ADDITIONALLY, PROVIDE TESTS AND INSPECTIONS IN ACCORDANCE WITH CCR TITLE 24, PART 2, SECTION 1928A. A PLACING RECORD SHALL BE
20. MAINTAINED FOR ALL CONCRETE PLACED IN THE STRUCTURE.
    A. PROVIDE CONTINUOUS INSPECTION AT CONCRETE BATCH PLANT, OR:
    B. THE QUANTITIES OF CONCRETE MATERIALS SHALL BE CERTIFIED BY A LICENSED WEIGHMASTER AND THE QUALITY OF MATERIALS SHALL BE VERIFIED BY THE OWNER'S TESTING AGENCY. COMPLY WITH ALL REQUIREMENTS OF TITLE 24, PART 2, SECTION 1928A.5.2 AND 1928A.6
21. ALL CONCRETE WORK SHALL BE FORMED. CASTING OF FOUNDATION CONCRETE AGAINST SIDES OF FOOTING EXCAVATIONS SHALL NOT BE ALLOWED EXCEPT AS SPECIFICALLY APPROVED BY ARCHITECT, STRUCTURAL ENGINEER AND THE DIVISION OF THE STATE ARCHITECT.
22. DRILLED IN CONCRETE EXPANSION BOLTS SHALL BE "KWIK-BOLT-II" BY HILTI, INC., PER ICBO APPROVAL NO. 4627, OR APPROVED EQUIVALENT. CONCRETE EPOXY TYPE ANCHORS SHALL BE "HIT" BY HILTI, INC., PER ICBO 5193, OR EQUIVALENT. INSTALL CONCRETE EXPANSION AND EPOXY ANCHORS PER ALL REQUIREMENTS OF THE MANUFACTURER, THE APPLICABLE ICBO APPROVALS, AND TITLE 24, PART 2, SECTION 1925A.3.5. USE EXPANSION AND EPOXY ANCHORS ONLY WHERE SHOWN ON THE DRAWINGS OR APPROVED IN ADVANCE BY THE STRUCTURAL ENGINEER AND DSA.

STRUCTURAL STEEL: NS_CBC95

1. ALL STRUCTURAL AND MISCELLANEOUS STEEL SHALL BE ASTM A36 UNLESS NOTED OTHERWISE.
2. TUBE MEMBERS SHALL BE ASTM A500 GRADE B. (F_y = 46,000 PSI)
3. ALL BOLTS SHALL BE ASTM A307 MACHINE BOLTS (INCLUDING SUPPLEMENTARY REQUIREMENT S1 PER ASTM) UNLESS NOTED OTHERWISE.
4. WHERE HIGH STRENGTH (H.S.) BOLTS ARE CALLED FOR ON THE DRAWINGS, BOLTS, NUTS AND WASHERS SHALL CONFORM TO THE ALLOWABLE STRESS DESIGN SPECIFICATION FOR STRUCTURAL JOINTS USING ASTM A325 OR A490 BOLTS BY THE RESEARCH COUNCIL ON STRUCTURAL CONNECTIONS OF THE ENGINEERING FOUNDATION, LATEST EDITION, AS ENDORSED BY THE AISC. SEE ALSO CBC CHAPTER 22A, SECTION 2210A.1. HIGH STRENGTH BOLTS SHALL BE ASTM A325 UNLESS NOTED OTHERWISE ON THE DRAWINGS. BOLTS ARE SLIP CRITICAL, U.O.N.
5. ALL WELDING SHALL BE IN ACCORDANCE WITH THE REQUIREMENTS OF THE CALIFORNIA BUILDING CODE (CBC) AND THE STRUCTURAL WELDING CODE – STEEL, AWS D1.1, LATEST EDITION, OF THE AMERICAN WELDING SOCIETY. SEE CBC CHAPTER 22A, SECTION 2209A. PROVIDE SPECIAL INSPECTION FOR ALL WELDING – SEE #8 BELOW. UTILIZE E70 LOW HYDROGEN ELECTRODES, TYPICAL.
6. FABRICATION AND ERECTION OF STRUCTURAL AND MISCELLANEOUS STEEL SHALL BE IN ACCORDANCE WITH THE REQUIREMENTS OF THE LATEST EDITION OF THE SPECIFICATION FOR STRUCTURAL STEEL BUILDINGS, ALLOWABLE STRESS DESIGN AND PLASTIC DESIGN, OF THE AMERICAN INSTITUTE OF STEEL CONSTRUCTION (AISC) (CBC CHAPTER 22A, SECTION 2203A). ALSO COMPLY WITH REQUIREMENTS OF THE AISC CODE OF STANDARD PRACTICE FOR STEEL BUILDINGS AND BRIDGES. (THERE ARE NO SELF-SUPPORTING FRAMES ON THIS PROJECT – TEMPORARY BRACING IS REQUIRED UNTIL ALL ELEMENTS SHOWN ON STRUCTURAL DRAWINGS ARE IN PLACE.)
7. PRIME ALL STEEL SURFACES WITH AN APPROVED ZINC RICH PRIMER, EXCEPT SURFACES TO BE EMBEDDED IN CONCRETE, CONTACT AREAS OF HIGH STRENGTH BOLTED CONNECTIONS AND SURFACES TO RECEIVE WELD OR SPRAY APPLIED FIREPROOFING. TOUCH-UP WELDS AND OTHER EXPOSED STEEL SURFACES AFTER ERECTION. (revision 4)
8. OWNER SHALL PROVIDE INSPECTIONS AND TESTS IN ACCORDANCE WITH CBC SECTION 2212A. OWNER'S INSPECTOR AND TESTING LABORATORY SHALL PROVIDE REPORTS TO THE ARCHITECT, STRUCTURAL ENGINEER, AND DIVISION OF THE STATE ARCHITECT. (revision 2)
9. SELF DRILLING SCREWS FOR ATTACHMENT OF WOOD OR STEEL TO STEEL SHALL BE TRAXX SCREWS BY ITW BUILDEX, DARTS SCREWS BY COMPASS INTERNATIONAL, OR EQUIVALENT. INSTALL PER MANUFACTURE'S INSTRUCTIONS AND THESE DRAWINGS.
10. DRIVE PINS FOR ATTACHMENT OF WOOD TO STEEL SHALL BE BY HILTI FASTENING SYSTEMS PER ICBO REPORT NO. 2388, OR EQUIVALENT. X-DNI DRIVE PINS SHALL BE DOME HEAD w/ SMOOTH SHANK (DRIVE THRU 7/8"ø x 5/64" WASHERS WHERE NOTED.) DS DRIVE PINS SHALL BE DOME HEAD w/ SMOOTH SHANK DRIVEN THRU 7/8"ø x 5/64" WASHERS TYPICAL. LENGTHS SHALL BE SUCH THAT FULL DIAMETER OF SHANK PENETRATES THRU STEEL MEMBER ATTACHED TO. INSTALL PER MANUFACTURER'S REQUIREMENTS, THESE DRAWINGS AND THE MANUFACTURER'S ICBO APPROVAL.
11. ATTACHMENT OF WOOD TO STEEL WHERE SHOWN ON DRAWINGS SHALL BE ET&F FASTENING SYSTEMS .144" ø PINS PER ICBO REPORT NO. 4144 OR EQUIVALENT. INSTALL PER MANUFACTURER'S REQUIREMENTS, THESE DRAWINGS AND THE MANUFACTURER'S ICBO APPROVAL. LENGTHS SHALL BE SUCH THAT PINS EXTEND THROUGH STEEL MEMBER 1/4" MINIMUM. (.190"ø PINS CAN BE USED AS AN ALTERNATE TO .144"ø PINS) (revision 1)
12. PNEUTEK SDL PINS BY PNEUTEK, INC. ARE AN ACCEPTABLE ALTERNATE TO HILTI OR ET & F PINS. PROVIDE EQUAL OR GREATER DIAMETER AND INSTALLATION PER MANUFACTURER'S INSTRUCTIONS. (revision 2)

FOUNDATIONS: (CONCRETE)

1. FOUNDATION BEARING SHALL BE AS APPROVED BY THE DIVISION OF THE STATE ARCHITECT AND THE OWNER'S ARCHITECT. IT IS THE SCHOOL DISTRICT'S RESPONSIBILITY TO PROVIDE ADEQUATE BEARING TO DEVELOP THE ALLOWABLE BEARING PRESSURE NOTED BELOW.
2. FOUNDATIONS ARE DESIGNED FOR A MAXIMUM DEAD PLUS LIVE LOAD ALLOWABLE SOIL BEARING PRESSURE OF 1000 PSF, AS PER CBC, TABLE NO. 18A-I-A OR IR 23-6.
3. THE BOTTOM OF ALL FOOTINGS SHALL BE LEVEL. CHANGES IN FOOTING ELEVATIONS SHALL BE MADE UTILIZING THE TYPICAL FOOTING STEP DETAILS ON THESE DRAWINGS.
4. CENTER FOOTINGS UNDER WALLS OR COLUMNS UNLESS OTHERWISE INDICATED ON THESE DRAWINGS.
5. PROVIDE PROPER GRADING OF SITE SUCH THAT WATER DOES NOT POND OR OTHERWISE COLLECT UNDER THE BUILDING.
6. FOUNDATIONS ARE DESIGNED AS FIXED FOUNDATIONS IN ACCORDANCE WITH IR 23-6 OR CBC CHAPTER 18A.
   A. ALL BUILDINGS, PERMANENT OR OTHER RELOCATABLE, ADJACENT TO THESE RELOCATABLE BUILDINGS MUST BE SEPARATED FROM THESE RELOCATABLE BUILDINGS BY 2" MINIMUM.

PAD FOUNDATIONS: (RESTRAINED)

1. FOUNDATION BEARING SHALL BE AS APPROVED BY THE DIVISION OF THE STATE ARCHITECT AND THE OWNER'S ARCHITECT. IT IS THE SCHOOL DISTRICT'S RESPONSIBILITY TO PROVIDE ADEQUATE BEARING TO DEVELOP THE ALLOWABLE BEARING PRESSURE NOTED BELOW.
2. FOUNDATIONS ARE DESIGNED FOR A MAXIMUM DEAD PLUS LIVE LOAD ALLOWABLE SOIL BEARING PRESSURE OF 1000 PSF, AS PER IR 23-6.
3. THE BOTTOM OF ALL FOOTINGS SHALL BE LEVEL. CHANGES IN FOOTING ELEVATIONS SHALL BE MADE UTILIZING THE FOOTING SHIM DETAILS ON THESE DRAWINGS.
4. CENTER FOOTINGS UNDER WALLS OR COLUMNS UNLESS OTHERWISE INDICATED ON THESE DRAWINGS.
5. PROVIDE PROPER GRADING OF SITE SUCH THAT WATER DOES NOT POND OR OTHERWISE COLLECT UNDER THE BUILDING.
6. VERIFY THAT NO PIPES, UTILITIES, OR OTHER SUCH ITEMS OCCUR BELOW FOOTINGS.
7. FOUNDATIONS ARE DESIGNED AS "RESTRAINED FOUNDATION", IN ACCORDANCE WITH IR 23-6, TEMPORARY FOUNDATIONS.
   A. ANCHOR FOOTINGS AT BUILDING PERIMETER WITH 1"ø GALVANIZED STANDARD STEEL PIPES DRIVEN FLUSH WITH TOP OF WOOD FOUNDATION PADS AND PENETRATING SOIL 12" MINIMUM AT AN AVERAGE SPACING OF 10'-0" O.C. AT SIDE WALLS AND AT EACH CORNER OF EACH MODULE AT ENDWALLS.
   B. ALL BUILDINGS, PERMANENT OR OTHER RELOCATABLE, ADJACENT TO THESE RELOCATABLE BUILDINGS MUST BE SEPARATED FROM THESE RELOCATABLE BUILDINGS BY 2" MINIMUM.
8. FINISH GRADES SHALL BE WITHIN MAXIMUM 18" BELOW BOTTOM OF FLOOR JOISTS, WITHOUT EXCEPTION.

LIGHT GAGE – COLD FORMED STEEL FRAMING NL_CBC95

1. ALL LIGHT GAGE FRAMING SHALL BE PER THE REQUIREMENTS OF THE 1995 CALIFORNIA BUILDING CODE (CBC) AND THE SPECIFICATION FOR DESIGN OF COLD-FORMED STEEL STRUCTURAL MEMBERS OF THE AMERICAN IRON AND STEEL INSTITUTE (1986 WITH 1989 ADDENDUM) (1995 CBC SECTION 2204A.1).
2. ALL LIGHT GAGE FRAMING SHALL BE PAINTED OR HOT-DIP GALVANIZED IN ACCORDANCE WITH ASTM C955 (PROTECTIVE COATING G60 FOR GALVANIZED ALTERNATE).
3. ALL WELDING SHALL BE IN ACCORDANCE WITH THE REQUIREMENTS OF THE CBC AND THE STRUCTURAL WELDING CODE – SHEET STEEL OF THE AMERICAN WELDING SOCIETY, AWS D1.3, LATEST REVISION.
4. ALL SCREWS SHALL BE TEKS/TRAXX SELF-DRILLING SCREWS BY ITW BUILDEX, OR APPROVED EQUIVALENT. INSTALL PER MANUFACTURER'S INSTRUCTIONS AND RECOMMENDATIONS.
5. ALL COLD FORMED STEEL PRODUCTS TO BE UTILIZED SHALL BE INCLUDED IN EVALUATION REPORTS OF THE INTERNATIONAL CONFERENCE OF BUILDING OFFICIALS (ICBO) VERIFYING ALL SECTION AND STRENGTH PROPERTIES NECESSARY FOR DESIGN, AND SHALL BE IN CONFORMANCE W/ ICBO ACCEPTANCE CRITERIA AC46.
6. LIGHT GAGE – COLD FORMED STEEL MEMBERS SHALL BE PER ASTM A653, STRUCTURAL QUALITY UNLESS NOTED OTHERWISE, MEMBERS 18 GA. AND LIGHTER SHALL HAVE A YIELD STRENGTH (F_y) OF 33,000 PSI AND 16 GA. AND HEAVIER MEMBERS SHALL HAVE A YIELD STRENGTH OF 50,000 PSI.
7. SEE B/S2.4 & C/S2.4 FOR MINIMUM REQUIRED PROPERTIES OF MEMBERS.
8. ASTM A607 GR. 55 CAN BE USED AS AN ALTERNATIVE TO ASTM A653 FOR LIGHT GAGE COLD FORMED STEEL MEMBERS. (revision 2)

DESIGN CRITERIA:

1. 20 PSF SNOW LOAD @ ROOF.
2. 50 PSF LIVE LOAD @ FLOOR (CLASSROOM).
3. 75 MPH WIND, EXPOSURE C.
4. SEISMIC ZONE 4 W/ Rw = 6.

12"=1'-0"

ABBREVIATIONS:

A.B.	ANCHOR BOLT
ABV.	ABOVE
ADDL.	ADDITIONAL
ADJ.	ADJACENT
ALT.	ALTERNATE
APPROX.	APPROXIMATE
ARCH.	ARCHITECTURAL
BLDG.	BUILDING
BLKG.	BLOCKING
BLW.	BELOW
BM.	BEAM
B.O.	BOTTOM OF
BOT.	BOTTOM
B.S.	BOTH SIDES
BTWN.	BETWEEN
C.J.	CONSTRUCTION JOINT
℄	CENTERLINE
CLG.	CEILING
CLR.	CLEAR
CMU	CONCRETE MASONRY UNIT
COL.	COLUMN
CONC.	CONCRETE
CONSTR.	CONSTRUCTION
CONN.	CONNECTION
CONT.	CONTINUOUS
CP	COMPLETE PENETRATION
CSK.	COUNTERSINK
DBL.	DOUBLE
DET.	DETAIL
D.F. or DF-L	DOUGLAS FIR-LARCH
DIAG.	DIAGONAL
DIM.	DIMENSION
D.O.	DITTO
DRWG.	DRAWING
DIA., ø	DIAMETER
(E)	EXISTING
EA.	EACH
E.F.	EACH FACE
E.J.	EXPANSION JOINT
ELEV.	ELEVATION
E.N.	EDGE NAILS
EQ.	EQUAL
EQUIP.	EQUIPMENT
E.S.	EACH SIDE
EXTR.	EXTERIOR
E.W.	EACH WAY
F.F.	FINISH FLOOR
F.G.	FINISH GRADE
FIN.	FINISH
FLR.	FLOOR
F.N.	FACE NAIL
FND.	FOUNDATION
F.O.	FACE OF
F.O.C.	FACE OF CONCRETE
F.O.M.	FACE OF MASONRY
F.O.S.	FACE OF STUD
F.S.	FAR SIDE
FTG.	FOOTING
GA.	GAGE
GALV.	GALVANIZED
G.L.	GRID LINE
GLB	GLU-LAM BEAM
GYP. BD.	GYPSUM BOARD
HCB	HOLLOW CONCRETE BLOCK
HD	HOLDOWN
HDR.	HEADER
HK.	HOOK
HORIZ.	HORIZONTAL
H.S.	HIGH STRENGTH
INFO.	INFORMATION
INTR.	INTERIOR
INTRM.	INTERMEDIATE
IR	INTERPRETATIONS OF REGULATIONS
JT.	JOINT
LCTN.	LOCATION
LLV	LONG LEG VERTICAL
MAX.	MAXIMUM
MECH.	MECHANICAL
MFR.	MANUFACTURER
MIN.	MINIMUM
MOD.	MODULE
(N)	NEW
N.S.	NEAR SIDE
N.T.S.	NOT TO SCALE
O.C.	ON CENTER
O.H.	OPPOSITE HAND/OVERHANG
OPNG.	OPENING
OPP.	OPPOSITE
PC.	PIECE
PL. (℗)	PLATE
PPT	PRESSURE PRESERVATIVE TREATED
P.W.	PLYWOOD
REINF.	REINFORCEMENT
REQD.	REQUIRED
RWD.	REDWOOD
SHTHG.	SHEATHING
SIM.	SIMILAR
SQ.	SQUARE
STD.	STANDARD
STG'D.	STAGGERED
STIFF.	STIFFENER
S.W.	SHEARWALL
SYM.	SYMMETRICAL
T&B	TOP & BOTTOM
T&G	TONGUE & GROOVE
THRU	THROUGH
T.N.	TOE NAIL
T.O.	TOP OF
T.O.C.	TOP OF CONCRETE
T.O.S.	TOP OF STEEL
TS	TUBE STEEL
TYP.	TYPICAL
U.O.N.	UNLESS OTHERWISE NOTED
VERT.	VERTICAL
W/	WITH
W.P.	WORK POINT
WWF	WELDED WIRE FABRIC
WND.	WINDOW

TYPICAL DETAILS:

NOTE: ALL BARS BENT COLD – NO FIELD BENDING ALLOWED.

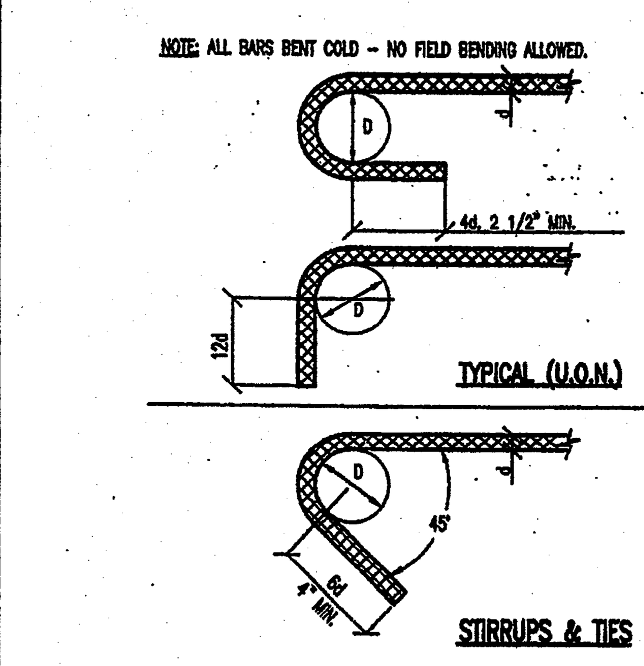

INSIDE BEND DIAMETERS

BAR SIZE	D
#3 TO #8	6d
#9,#10,#11	8d
#14,#18	10d

INSIDE BEND DIAMETERS

BAR SIZE	D
#3	1 1/2"
#4	2"
#5	2 1/2"

A / S0.1 — STD. HOOKS & BENDS IN REINF. STEEL (12/02/91)

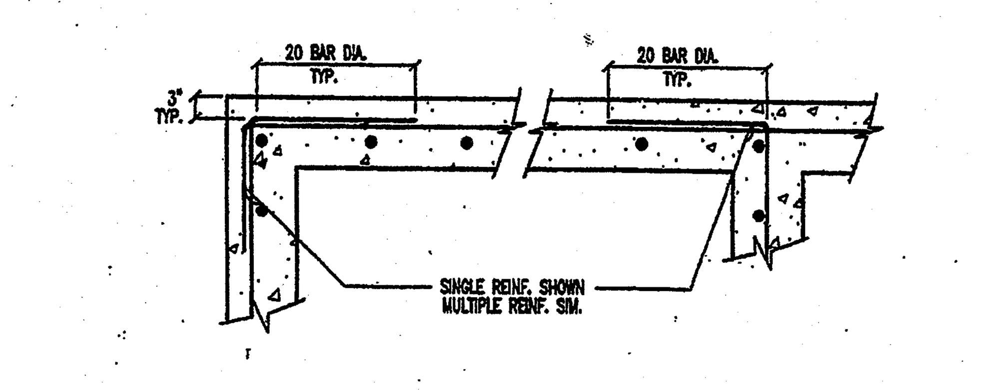

B / S0.1 — CONC. REINF. DETAIL (12/02/91)

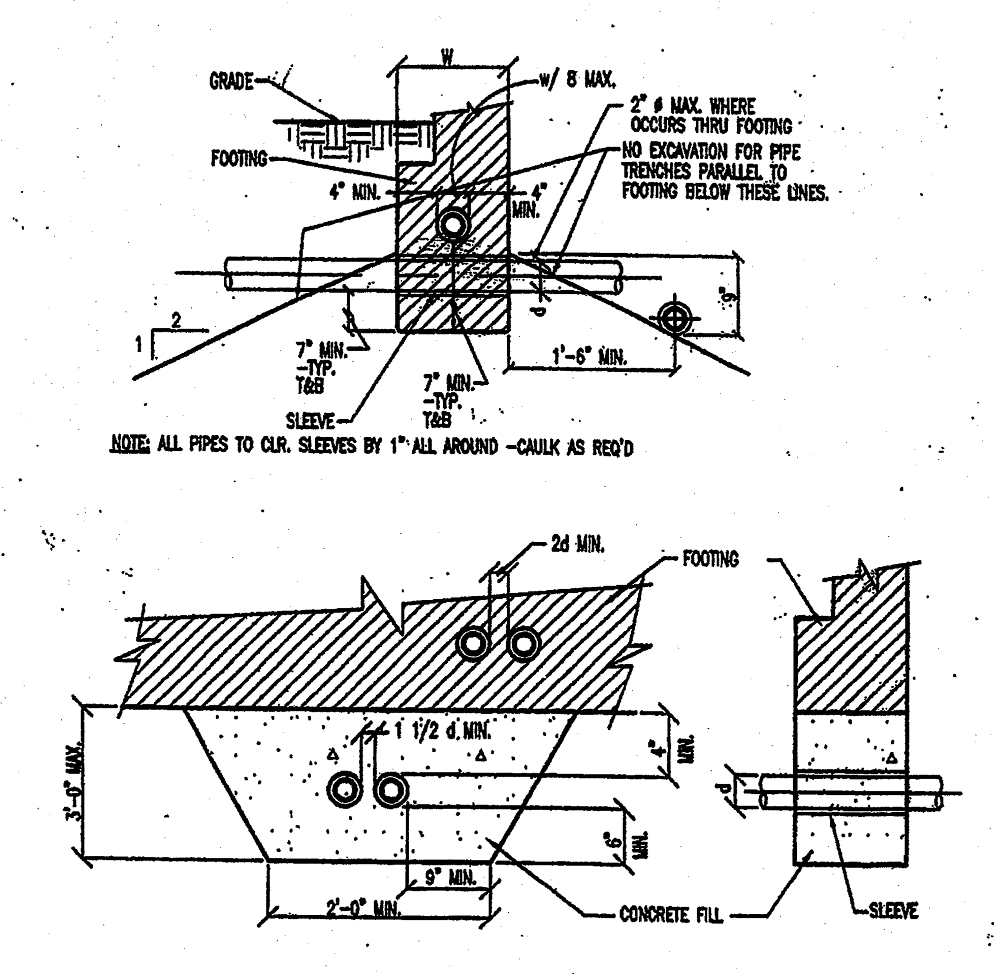

NOTE: ALL PIPES TO CLR. SLEEVES BY 1" ALL AROUND – CAULK AS REQ'D

NOTE: ALL PIPES TO CLEAR SLEEVES BY 1" ALL AROUND – CAULK AS REQUIRED. PIPE NEVER TO BE MORE THAN 2'-6" BELOW BOTTOM OF FOOTING; STEP FOOTING IF REQUIRED PER TYPICAL STEP DETAILS.

C / S0.1 — PIPES AT FOOTINGS (12/02/91)

IDENTIFICATION STAMP
DIV. OF THE STATE ARCHITECT
OFFICE OF REGULATION SERVICES
02 100845
AC ___ FLS ___ SS ___
DATE NOV 25 1998

IDENTIFICATION STAMP
DIV. OF THE STATE ARCHITECT
OFFICE OF REGULATION SERVICES
02 100898
AC ___ FLS ___ SS ___
DATE 12/10/98

⚠ – REVISED

IDENTIFICATION STAMP
DIV. OF THE STATE ARCHITECT
OFFICE OF REGULATION SERVICES
PC-330
AC ___ FLS ___ SS ___
DATE ___

24'x40' BLDG.

DESIGN (1995 CBC)			
ROOF LIVE LOAD	= 20	PSF	(SNOW)
FLOOR LIVE LOAD	= 50	PSF	
WIND	= 75	MPH	EXP C

REVISIONS	BY
△1 5-13-97	BD
△2 6-30-97	BD
△3 7-29-97/NO CHANGE	BD
△4 8-27-97	BD
△5 80 MPH – SEE ALT. SHTS.	BD
△6 10-31-97	BD
△7 12-17-97/NO CHANGES	BD

PACESETTER INDUSTRIES, INC.
2507 HERITAGE DRIVE, BLDG. NO. 1230, ATWATER, CA. 95301 TEL: (209) 725-1600 FAX: (209) 381-7833

24x40 RELOCATABLE BUILDING

GENERAL NOTES AND TYPICAL DETAILS

REGISTERED PROFESSIONAL ENGINEER — BRUCE D. DOIG — No. 2522 — STRUCTURAL — STATE OF CALIFORNIA
EXPIRES 3-31-00

ANDERSON & DOIG STRUCTURAL ENGINEERS
A CALIFORNIA CORPORATION
10308 PLACER LANE, STE 100, SACRAMENTO, CA 95827-2511
(916) 366-9622 FAX: (916) 366-9623

DRAWN	JR
CHECKED	BD/PLS
DATE	12-17-97
SCALE	N.T.S.
JOB NO.	97007 PSPC1
SHEET	S0.1