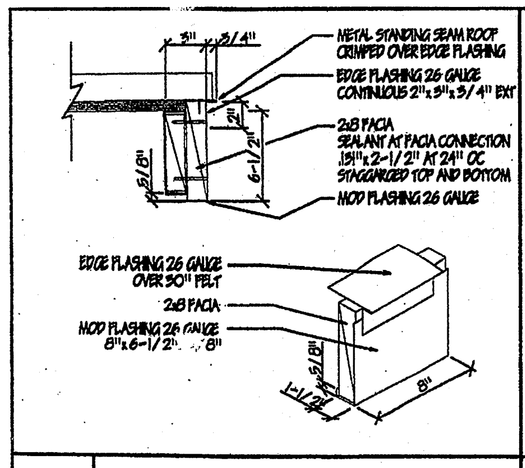


1 ROOF MOD TRIM SCALE: 1-1/2"=1'-0"

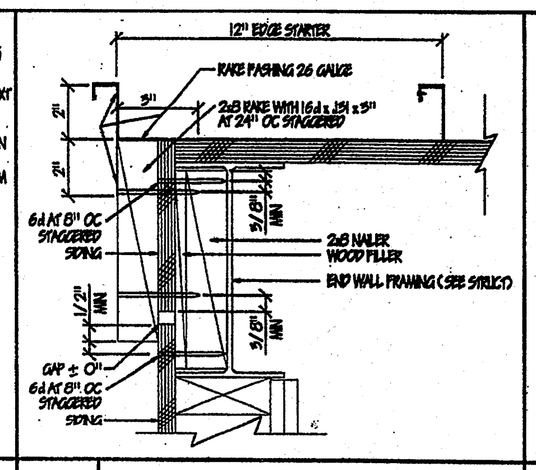


6 ROOF RAKE SCALE: 3"=1'-0"

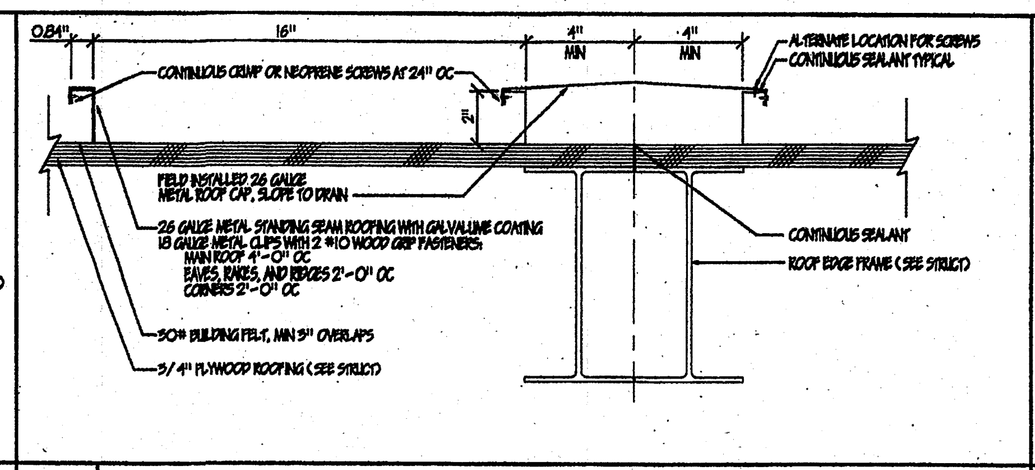


11 MODULE LINE ROOF CAP SCALE: 3"=1'-0"

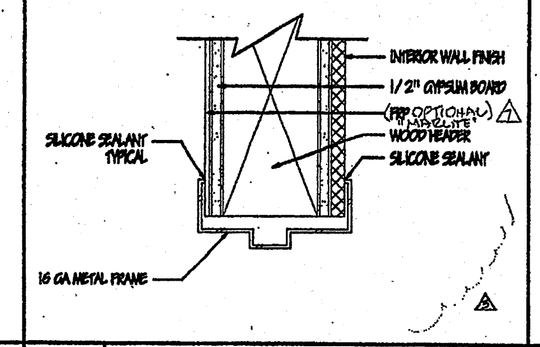


19 INT. DOOR HEAD SCALE: 3"=1'-0"

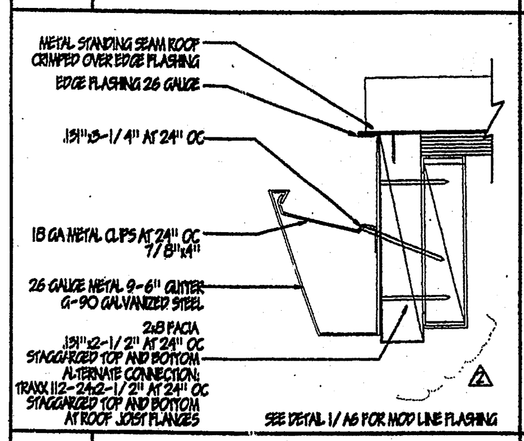


2 GUTTER SCALE: 3"=1'-0"

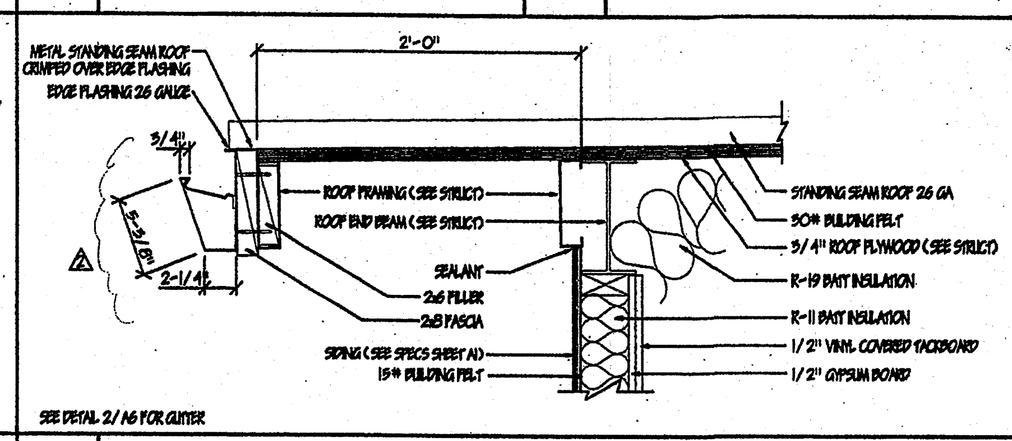


7 REAR OVHG SCALE: 1-1/2"=1'-0"

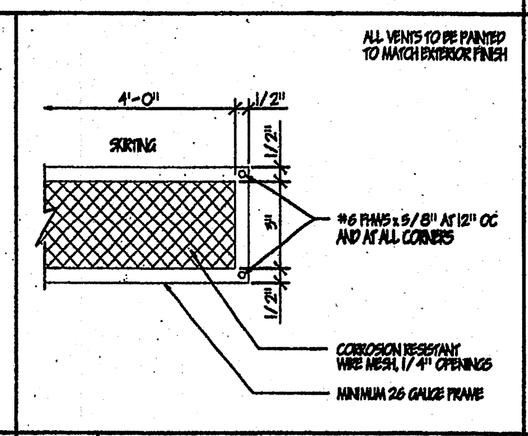


15 VENT SCALE: 3"=1'-0"

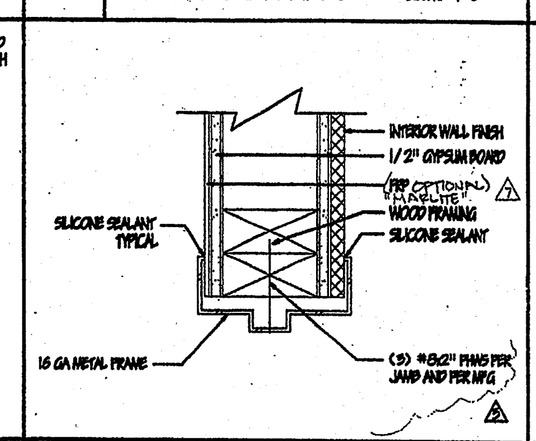


20 INT. DOOR JAMB SCALE: 3"=1'-0"

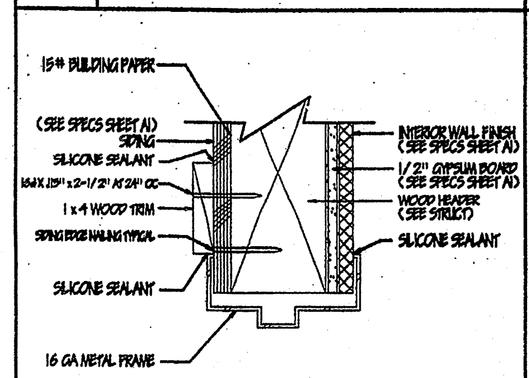


3 DOOR HEAD SCALE: 3"=1'-0"

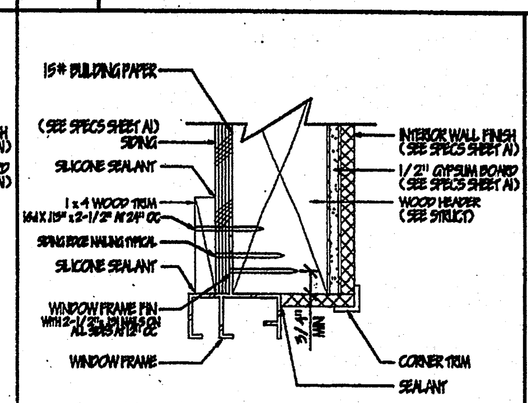


8 WINDOW HEAD SCALE: 3"=1'-0"

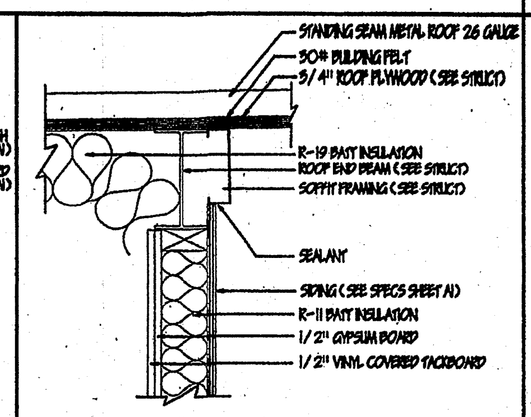


12 ENTRY OVHG SCALE: 1-1/2"=1'-0"

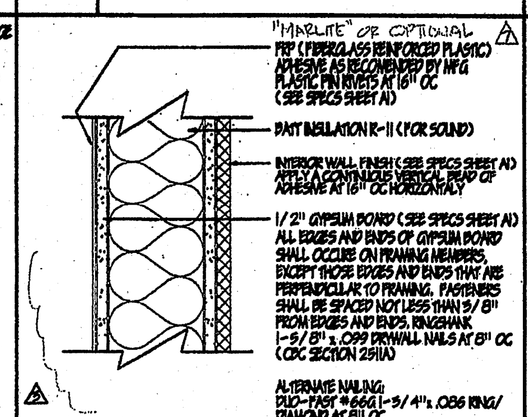


16 INT. WALL FINISH SCALE: 3"=1'-0"

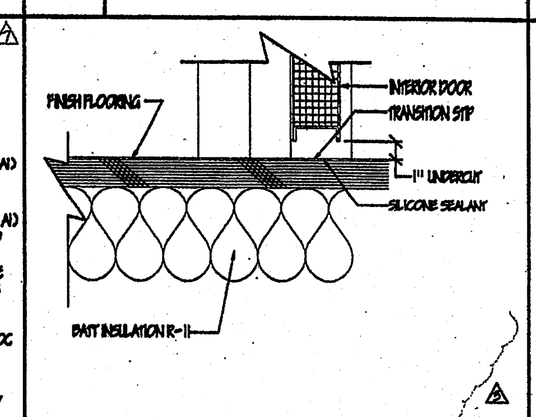


21 DOOR THRESHOLD SCALE: 3"=1'-0"

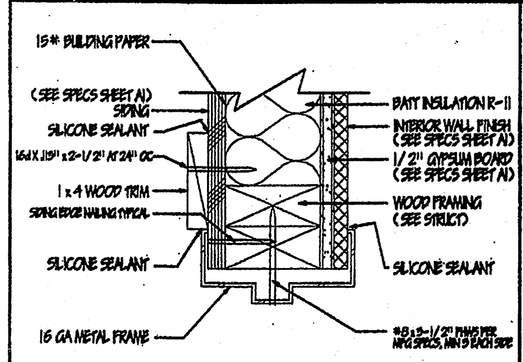


4 DOOR JAMB SCALE: 3"=1'-0"

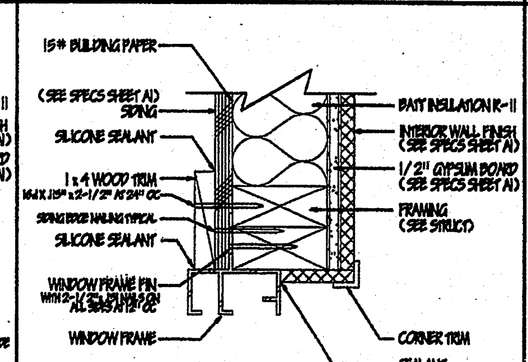


9 WINDOW JAMB SCALE: 3"=1'-0"

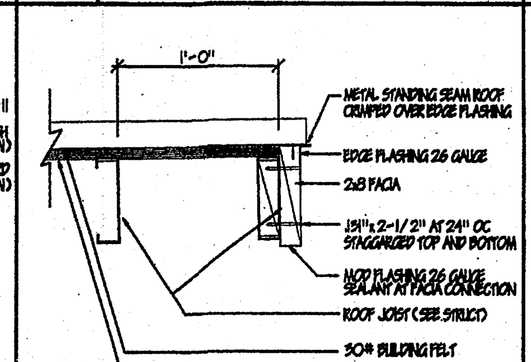


13 ENTRY OVHG SCALE: 1-1/2"=1'-0"

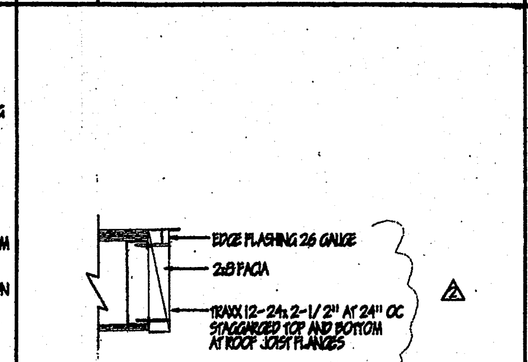


17 OVHG ALTERNATE SCALE: 1-1/2"=1'-0"

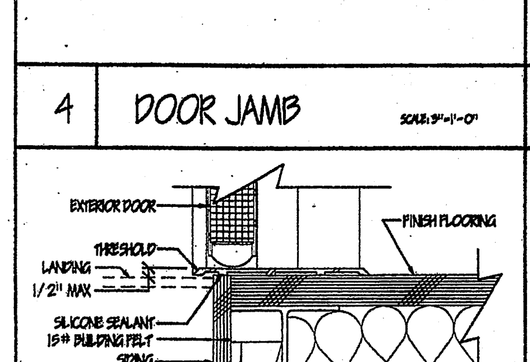


5 DOOR THRESHOLD SCALE: 3"=1'-0"

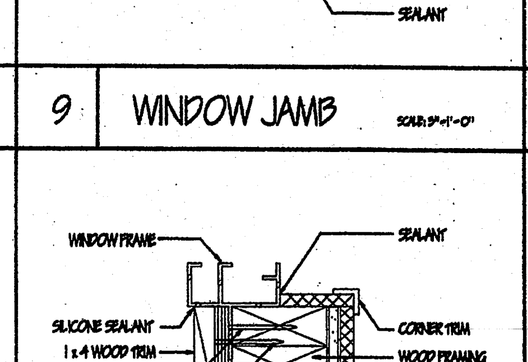


10 WINDOW SILL SCALE: 3"=1'-0"

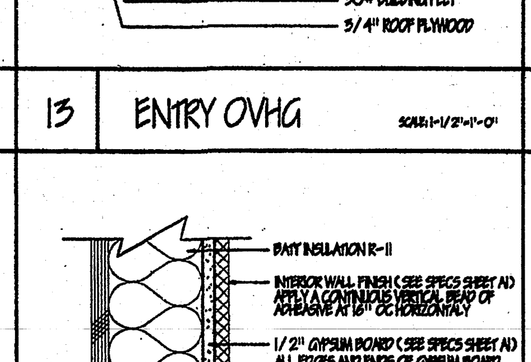


14 WALL FINISH SCALE: 3"=1'-0"

## GENERAL NOTES

ALL FINISHES SHALL COMPLY WITH CBC CHAPTERS 9, 6, 7, 8, AND 10

ABBREVIATIONS:

| | |
|---|---|
| AFF | ABOVE FINISH FLOOR |
| AL OR ALUM | ALUMINUM |
| FDN | FOUNDATION |
| GA | GAUGE |
| HM | HOLLOW METAL |
| INT | INTERIOR |
| MAX. | MAXIMUM |
| MFG | MANUFACTURER |
| MIN. | MINIMUM |
| NO. | NUMBER |
| NR | NOT RATED |
| OVHG | OVERHANG |
| PR | PAIR |
| STRUCT | STRUCTURAL |

## LEGEND

- BATT INSULATION
- WOOD MEMBER
- BLOCKING
- GYPSUM BOARD
- PLYWOOD

## APPROVALS

IDENTIFICATION STAMP DIV. OF THE STATE ARCHITECT OFFICE OF REGULATION SERVICES 02 100845 AC FLS SS DATE NOV 25 1998

IDENTIFICATION STAMP DIV. OF THE STATE ARCHITECT OFFICE OF REGULATION SERVICES 02 100537 AC FLS SS DATE 7/1/98

IDENTIFICATION STAMP DIV. OF THE STATE ARCHITECT OFFICE OF REGULATION SERVICES 02 100898 AC FLS SS DATE 12/10/98

IDENTIFICATION STAMP DIV. OF THE STATE ARCHITECT OFFICE OF REGULATION SERVICES PC 330 AC FLS SS DATE NOV 20 '98 REV #6


PACESETTER INDUSTRIES, INC.
P.O. BOX 1131, MODESTO, CA 95353 (209) 521-1600


# 24x40 RELOCATABLE BUILDING

SHEET CONTENTS:
GENERAL NOTES
DETAILS

| | | |
|---|---|---|
| DATE: | | APRIL 28, 1997 |
| REV. #1 | △1 | MAY 19, 1997 |
| REV. #2 | △2 | JUNE 20, 1997 |
| REV. #3 | △3 | AUGUST 1, 1997 |
| REV. #4 | △4 | AUGUST 26, 1997 |
| REV #7 | △7 | 12-17-97 |
| DRAWING SCALE: | | AS SHOWN |
| PROJECT NUMBER: | | 97-05 |
| SHEET | | A6 |