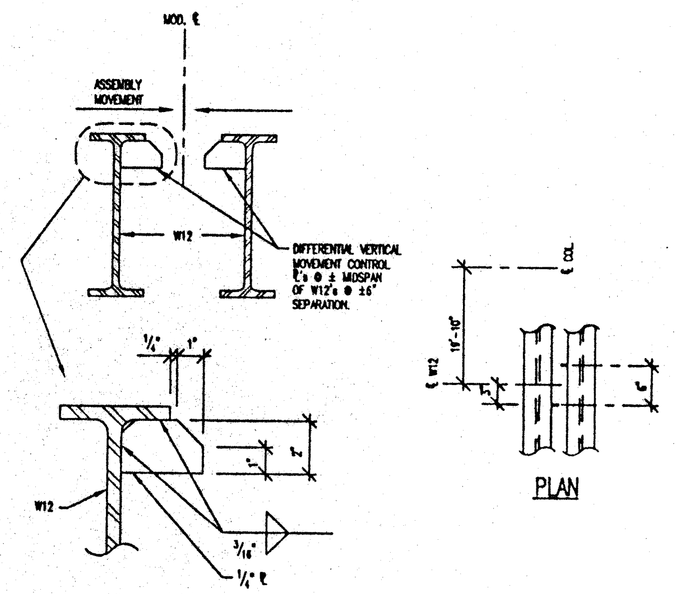

A / S8.2 ROOF DETAIL – MODULE LINE BM.'s VERTICAL CONTROL ℄'s
SCALE: 1 1/2"=1'-0"
(OPTIONAL)

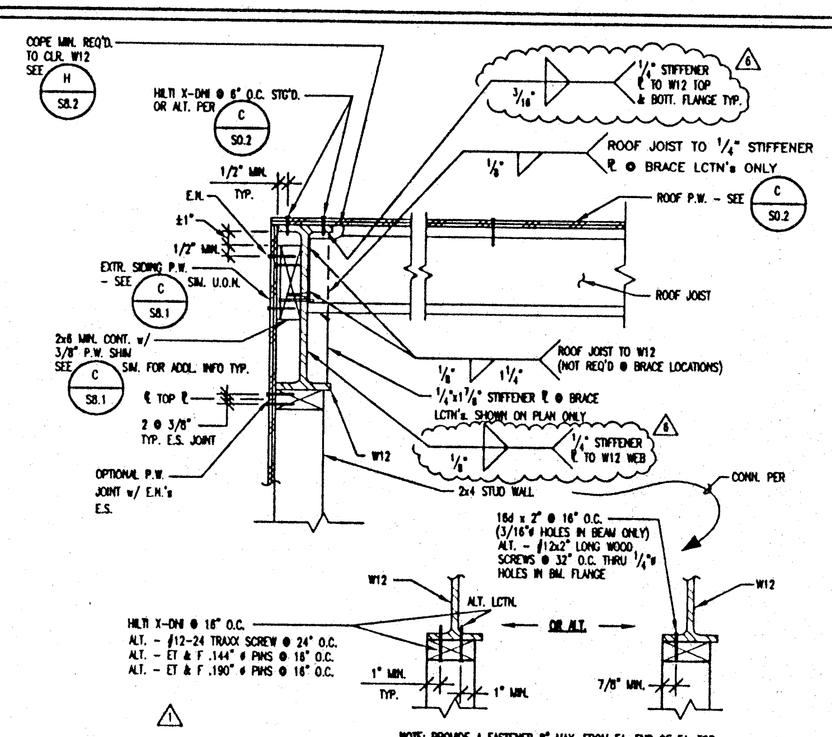

B / S8.2 ROOF DETAIL – TYP. @ SIDEWALL
SCALE: 1 1/2"=1'-0"

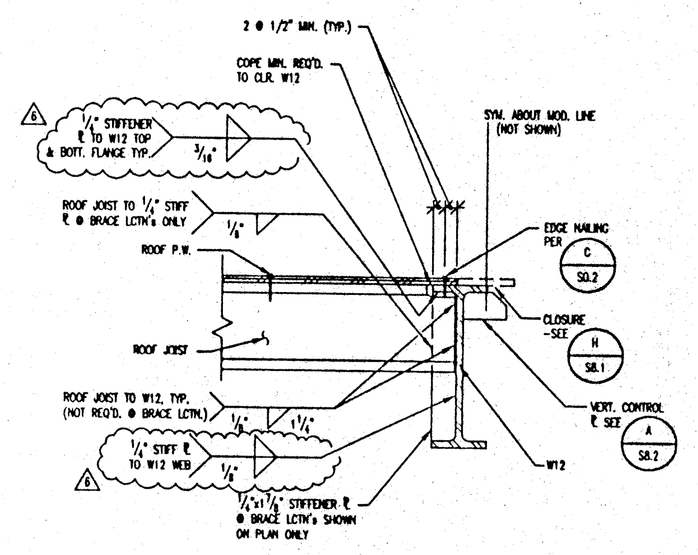

C / S8.2 ROOF DETAIL – TYP. @ MODULE LINE
SCALE: 1 1/2"=1'-0"

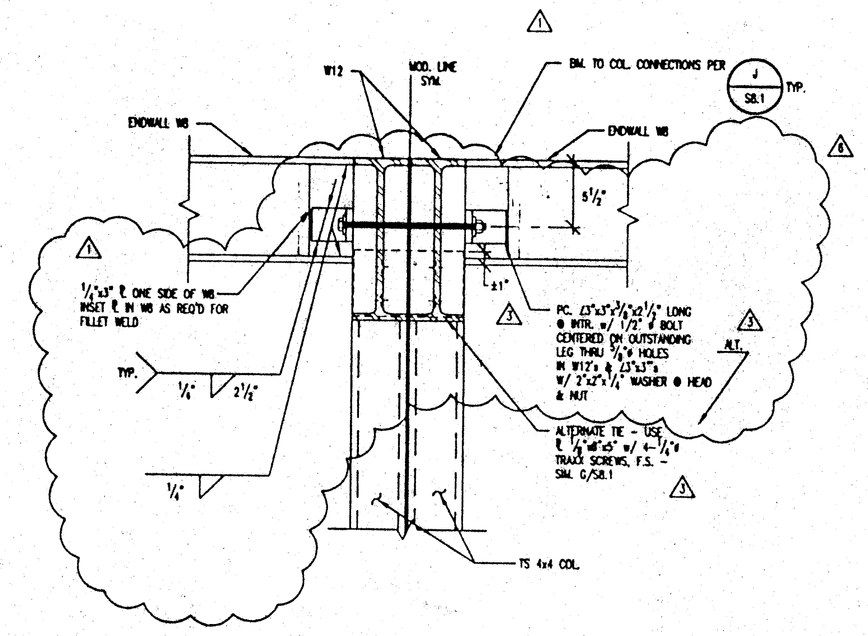

D / S8.2 TYP. DET. @ ROOF-FRONT & REAR ENDWALL WALL TIE @ MOD. LINE
SCALE: 1 1/2"=1'-0"

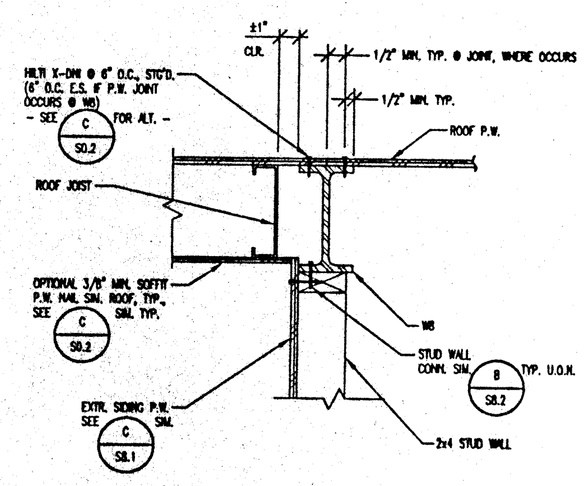

E / S8.2 ROOF DETAIL – TYP. @ ENDWALLS
SCALE: 1 1/2"=1'-0"

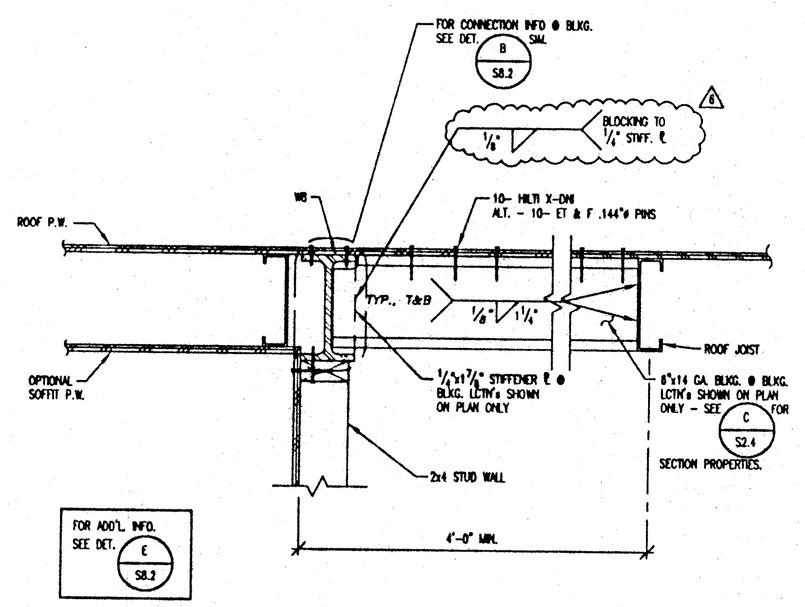

F / S8.2 ROOF DETAIL-BLKG. @ ENDWALL BEAM
SCALE: 1 1/2"=1'-0" (TYP. @ FRONT & REAR)

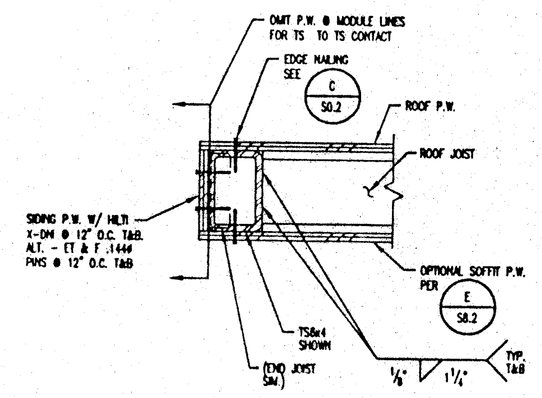

G / S8.2 ROOF DETAIL – @ FRONT & REAR EAVES
SCALE: 1 1/2"=1'-0"

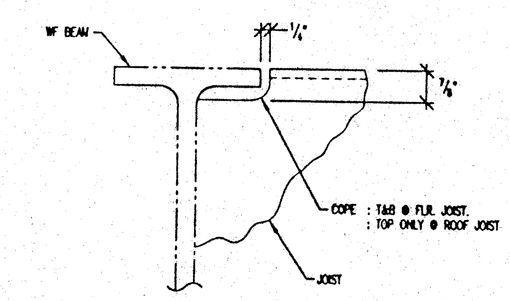

H / S8.2 TYPICAL COPE OF ROOF/FLR. JOIST @ W8 OR W12 BEAMS
SCALE: 1/2"=1'-0"

THESE DRAWINGS AND / OR SPECIFICATIONS AND / OR CALCULATIONS FOR THE ITEMS LISTED BELOW HAVE BEEN PREPARED BY OTHER DESIGN PROFESSIONALS WHO ARE LICENSED AND AUTHORIZED TO PREPARED SUCH DRAWINGS IN THIS STATE. THESE DOCUMENTS HAVE BEEN EXAMINED BY ME AND HAVE BEEN FOUND TO MEET THE APPROPRIATE REQUIREMENTS OF TITLE 24, CALIFORNIA CODE OF REGULATIONS AND THE PROJECT SPECIFICATIONS PREPARED BY ME.
THE ITEMS LISTED BELOW ARE ACCEPTABLE FOR INCORPORATION INTO THE CONSTRUCTION OF THIS PROJECT FOR WHICH I AM THE INDIVIDUAL DESIGNATED TO BE IN GENERAL RESPONSIBLE CHARGE (OR FOR WHICH I HAVE BEEN DELIGATED RESPONSIBILITY FOR THIS PORTION OF THE WORK)
A LIST OF ITEMS HAVE BE REVIEWED AND ACCEPTED. (FOR DRAWINGS, A LIST OF ALL ACCEPTED DRAWINGS ARE ATTACHED, SEE SHEET NO. _____).

LICENSED ARCHITECT STEPHEN J. CORBI No. C-16788 REN. 11/30/01 STATE OF CALIFORNIA

STEPHEN J. CORBI, ICARB, AIA DATE 08/21/00
LICENSE # C-16788
EXP. DATE 11/30/01

J / S8.2 NOT UTILIZED

K / S8.2 NOT UTILIZED

NOTE: SEE C / S8.1 & F / S8.1 SIM., TYP. FOR ADD'L. INFO., U.O.N.

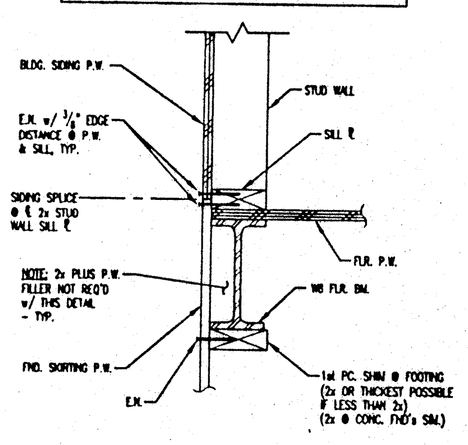

L / S8.2 TYP. DET.–ALT. FND. SKIRTING ATTACHMENT @ FLR. PERIMETER
SCALE: 1 1/2"=1'-0"
(WOOD STUD WALLS SHOWN - METAL STUD WALLS SIM.)

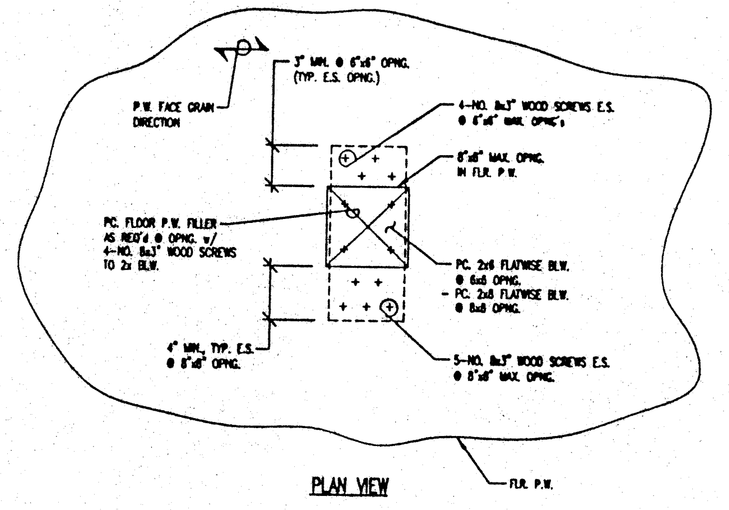

PLAN VIEW

M / S8.2 TYP. DET.–SMALL ACCESS OPNG. @ FLR. P.W.
SCALE: 1 1/2" = 1'-0"

IDENTIFICATION STAMP DIV. OF THE STATE ARCHITECT OFFICE OF REGULATION SERVICES
PC-330
AC: ___ PLS: ___ BS: 595
DATE: NOV 20 1997

24'x40' BLDG.

DESIGN (1995 CBC)			
ROOF LIVE LOAD	=	20	PSF
FLOOR LIVE LOAD	=	50	PSF
WIND	=	75	MPH
SEISMIC ZONE	=	4	

LICENSED ARCHITECT NORMAN K. GEIGER No. C-23016 REN. 12-31-99 STATE OF CALIFORNIA
DATE

IDENTIFICATION STAMP DIV. OF THE STATE ARCHITECT OFFICE OF REGULATION SERVICES
AC: ___ PLS: ___ BS: ___
DATE: ___

△5 – REVISED

REVISIONS	BY
△1 5-22-97	BD
△2 6-30-97	BD
△3 7-29-97	BD
△4 NO CHANGE/8-27-97	BD
△5 80 MPH - SEE ALT. SHTS.	BD
△6 10-14-97	BD

PACESETTER INDUSTRIES, INC.
P.O. BOX 1131, MODESTO, CA 95353 (209) 521-1600

24x40 RELOCATABLE BUILDING

ROOF DETAILS

REGISTERED PROFESSIONAL ENGINEER BRUCE D. DOIG No. 2527 STRUCTURAL STATE OF CALIFORNIA
EXPIRES 3-31-00

ANDERSON & DOIG STRUCTURAL ENGINEERS
A CALIFORNIA CORPORATION
3038 PLACER LANE, STE. 100, SACRAMENTO, CA 95827-2511
(916) 366-9622 FAX (916) 366-9633

DRAWN	JR
CHECKED	BD/PLS
DATE	10-14-97
SCALE	AS NOTED
JOB NO.	97007 PSPC1
SHEET	S8.2
OF	SHEETS

D:\PROJECTS\PROJ_97\97007_PSPC1\S8_2.dwg Tue Oct 14 15:34:28 1997