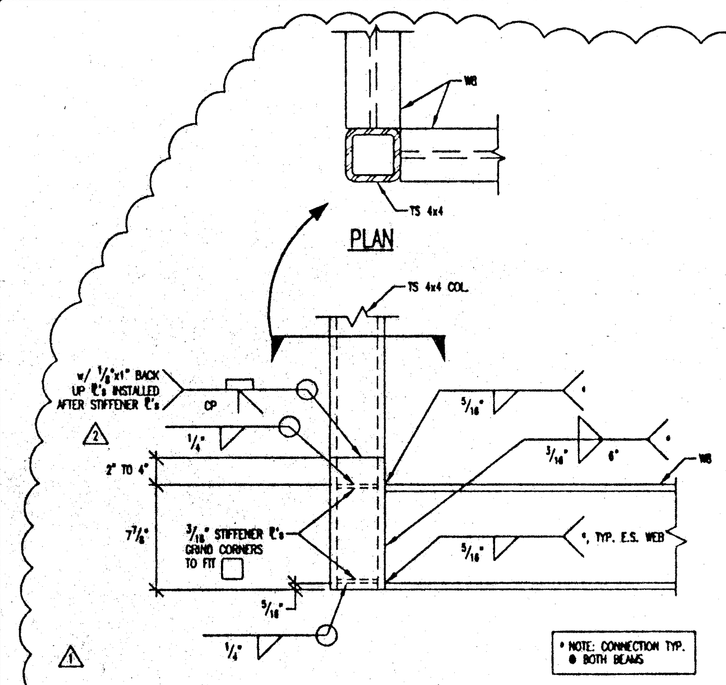

A / S8.1 TYP. FLOOR BMS. @ TS COL. CONN.
SCALE: 1 1/2"=1'-0"

B / S8.1 NOT UTILIZED

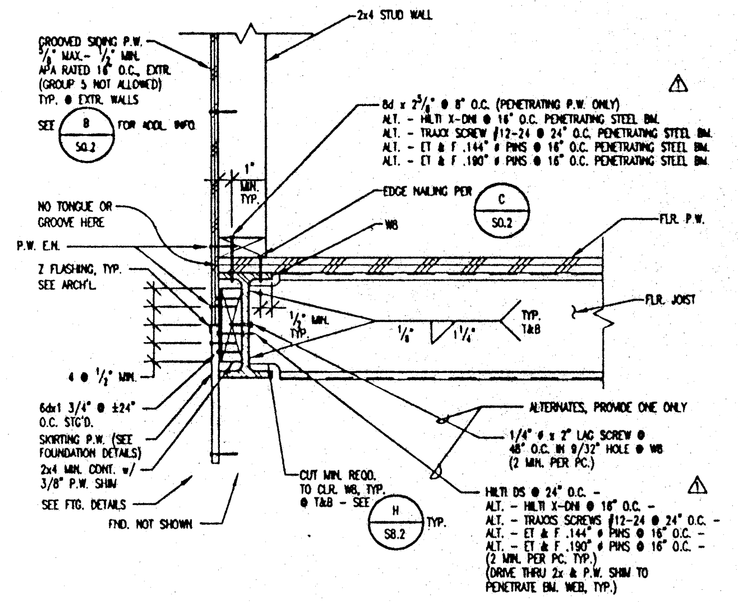

C / S8.1 DETAIL - FLOOR @ SIDEWALL
SCALE: 1 1/2"=1'-0"

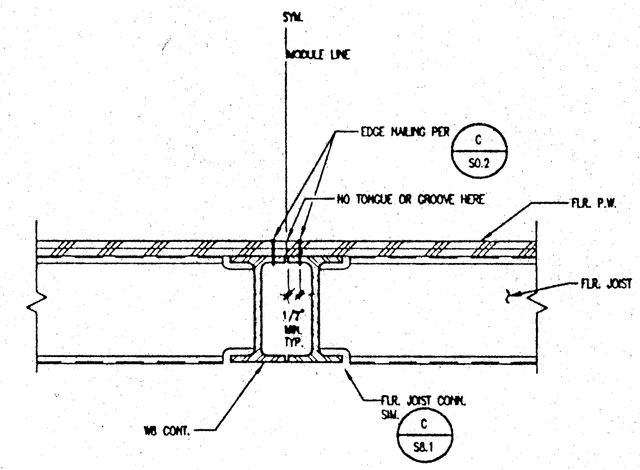

D / S8.1 DETAIL - FLOOR @ MODULE LINE
SCALE: 1 1/2"=1'-0"

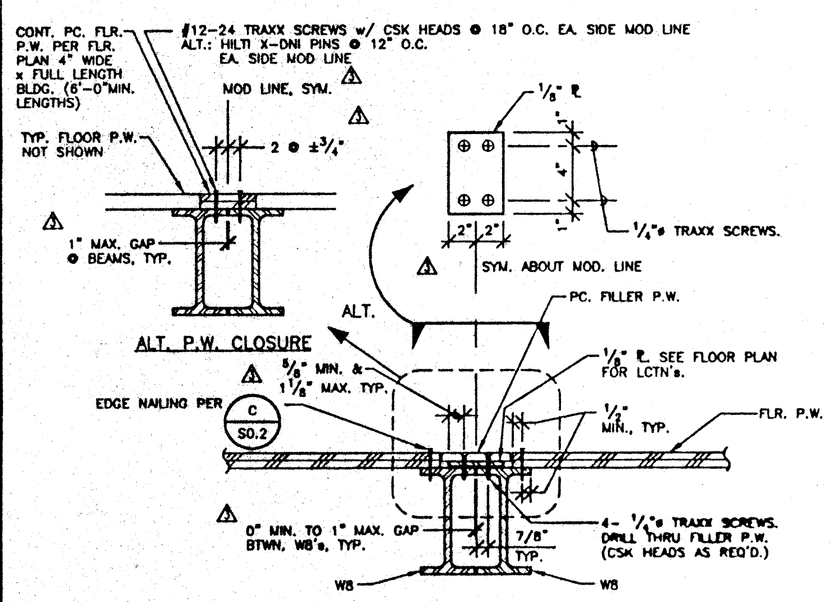

E / S8.1 DETAIL - MOD. TO MOD. TIE @ FLR.
SCALE: 1 1/2"=1'-0"

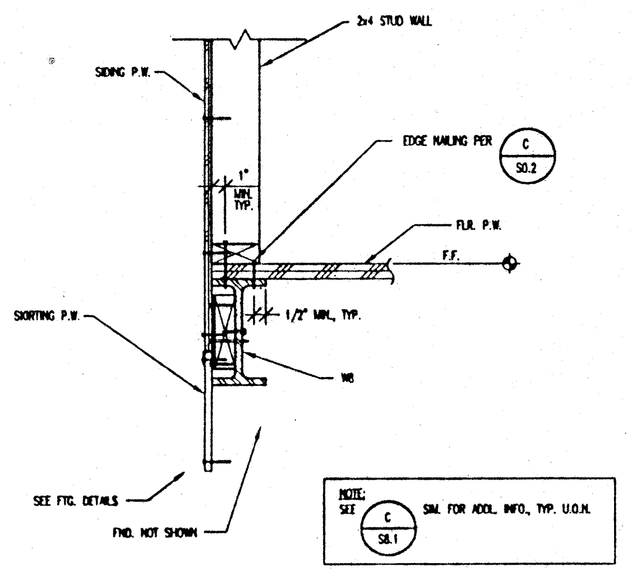

F / S8.1 DETAIL - ENDWALL @ FLOOR
SCALE: 1 1/2"=1'-0"

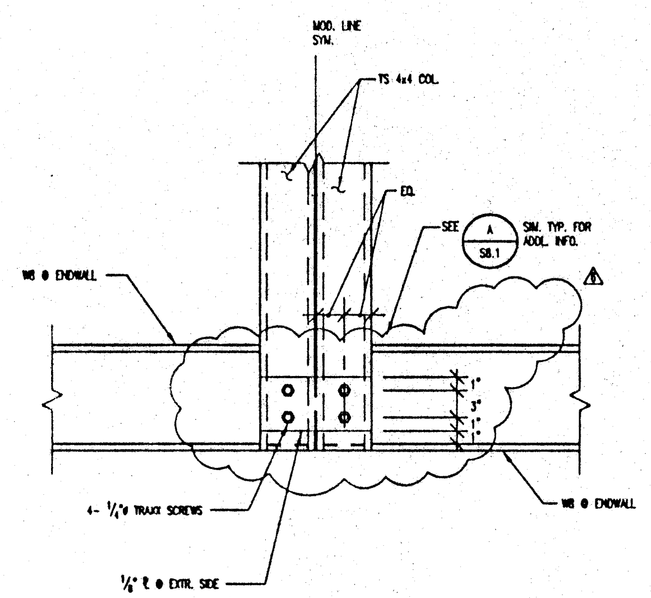

G / S8.1 TYP. DET. @ FLR.-FRONT & REAR ENDWALL TIE @ MOD. LINE
SCALE: 1 1/2"=1'-0"

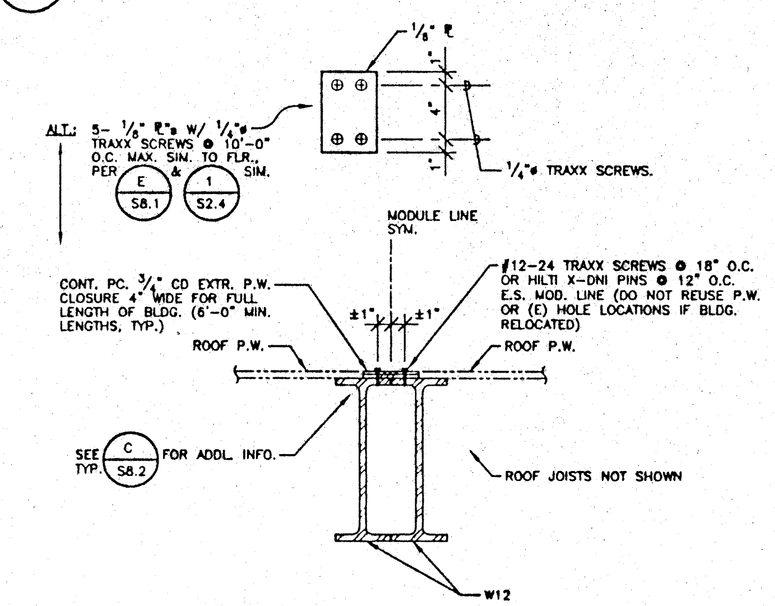

H / S8.1 ROOF DETAIL - MODULE LINE TIE
SCALE: 1 1/2"=1'-0"

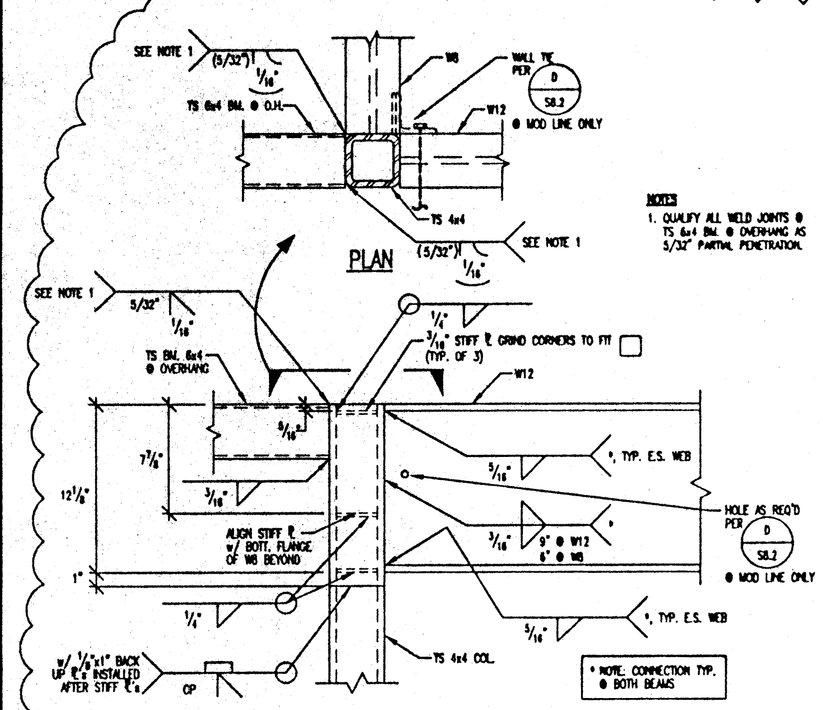

J / S8.1 TYP. ROOF BEAMS @ TS COL. CONN.
SCALE: 1 1/2"=1'-0"

K / S8.1 NOT UTILIZED

L / S8.1 NOT UTILIZED

THESE DRAWINGS AND / OR SPECIFICATIONS AND / OR CALCULATIONS FOR THE ITEMS LISTED BELOW HAVE BEEN PREPARED BY OTHER DESIGN PROFESSIONALS WHO ARE LICENSED AND AUTHORIZED TO PREPARED SUCH DRAWINGS IN THIS STATE. THESE DOCUMENTS HAVE BEEN EXAMINED BY ME AND HAVE BEEN FOUND TO MEET THE APPROPRIATE REQUIREMENTS OF TITLE 24, CALIFORNIA CODE OF REGULATIONS AND THE PROJECT SPECIFICATIONS PREPARED BY ME.
THE ITEMS LISTED BELOW ARE ACCEPTABLE FOR INCORPORATION INTO THE CONSTRUCTION OF THIS PROJECT FOR WHICH I AM THE INDIVIDUAL DESIGNATED TO BE IN GENERAL RESPONSIBLE CHARGE (OR FOR WHICH I HAVE BEEN DELIGATED RESPONSIBILITY FOR THIS PORTION OF THE WORK).
A LIST OF ITEMS HAVE BE REVIEWED AND ACCEPTED. (FOR DRAWINGS, A LIST OF ALL ACCEPTED DRAWINGS ARE ATTACHED. SEE SHEET NO.).

LICENSED ARCHITECT STEPHEN J. CORBIN No.C-16788 REN. 11/30/01 STATE OF CALIFORNIA

Stephen J. Corbin, RCARB, AIA DATE 3/6/00
LICENSE # C-16788
EXP. DATE 11/30/01

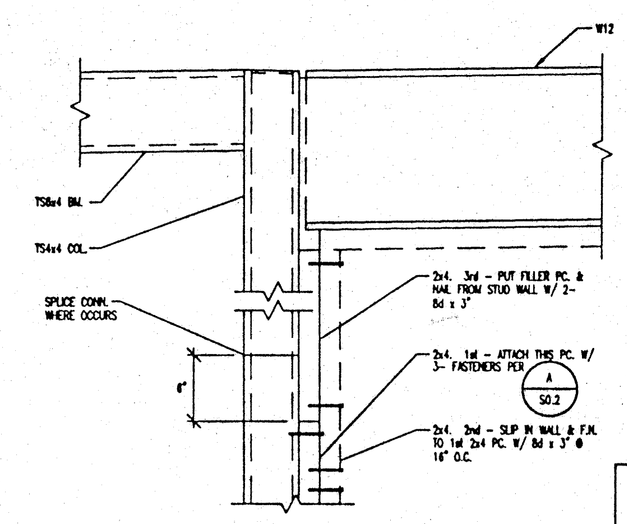

M / S8.1 ALT.-WD. STUD TO TS COL. CONN.
SCALE: 1 1/2"=1'-0"

LICENSED ARCHITECT ROGAN E. GREGER C-23016 10-99 RENEWAL DATE STATE OF CALIFORNIA

IDENTIFICATION STAMP DIV OF THE STATE ARCHITECT
APPROVED
AC: FS: SS:
DATE:

△ - REVISED

IDENTIFICATION STAMP
DIV. OF THE STATE ARCHITECT
OFFICE OF REGULATION SERVICES
PC-330
AC: FLS: SS:
DATE: NOV 20 1997

24'x40' BLDG.

DESIGN (1995 CBC)				
ROOF LIVE LOAD	=	20	PSF	(horiz)
FLOOR LIVE LOAD	=	50	PSF	
WIND	=	75	MPH	EXP C
SEISMIC ZONE	=	4		

REVISIONS	BY
△1 5-22-97	BD
△2 6-30-97/NO CHANGE	BD
△3 7-29-97	BD
△4 8-27-97/NO CHANGE	BD
△5 80 MPH - SEE ALT. SHTS.	BD
△6 10-14-97	BD

PACESETTER INDUSTRIES, INC.
P.O. BOX 1131, MODESTO, CA 95353 (209) 521-1600

24x40 RELOCATABLE BUILDING

ROOF & FLOOR DETAILS

REGISTERED PROFESSIONAL ENGINEER BRUCE D. DOIG No. 2522 STRUCTURAL STATE OF CALIFORNIA
EXPIRES 3-31-00

ANDERSON & DOIG STRUCTURAL ENGINEERS
A CALIFORNIA CORPORATION
10338 PLACER LANE, STE 100, SACRAMENTO, CA 95827-2531
(916) 366-9422 FAX (916) 366-9423

DRAWN	JR
CHECKED	BD/PLS
DATE	10-14-97
SCALE	AS NOTED
JOB NO.	97007 PSPC1
SHEET	S8.1
OF	SHEETS

C:\MACADCS\PROJ_97\97007_PSPC1\S8_1.dwg Tue Oct 14 15:30:13 1997