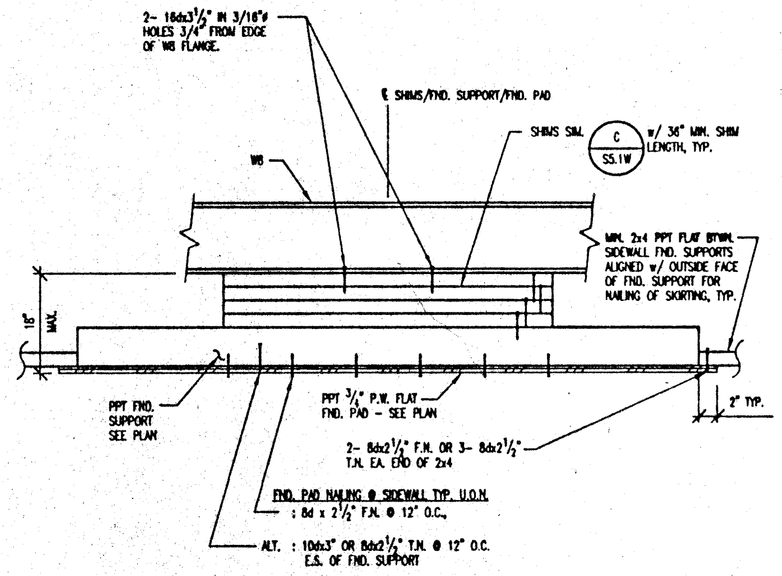

A SS.1W DET. - FOOTING @ SIDEWALLS (TYP. U.O.N.)
SCALE: 1" = 1'-0"

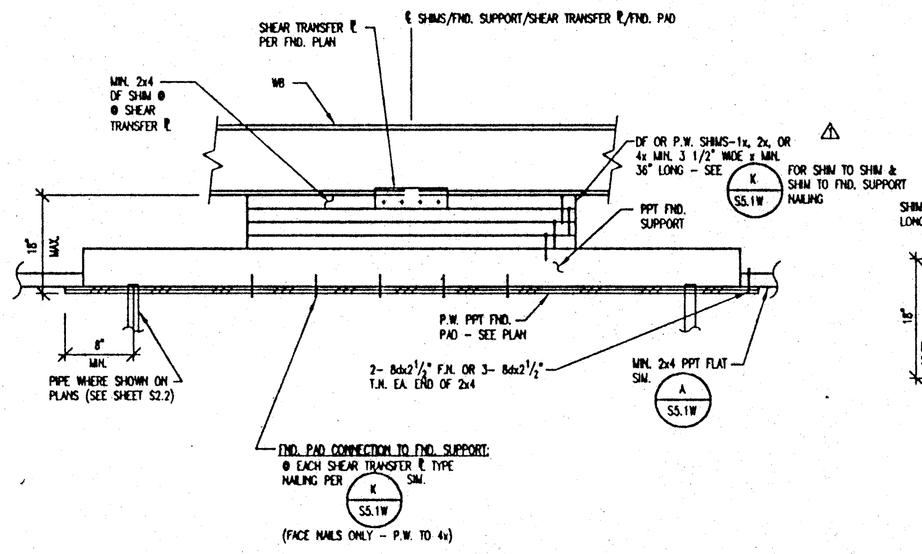

B SS.1W DET.-FTG. @ SIDEWALLS w/ SHEAR TRANSFER ℄
SCALE: 1" = 1'-0"

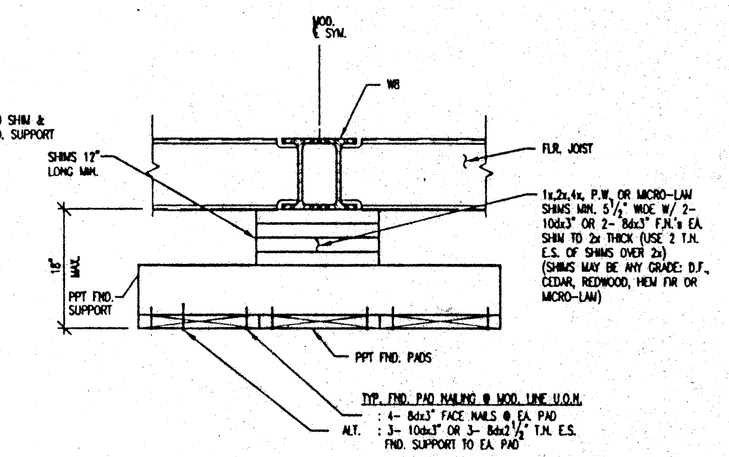

C SS.1W DET. - FTG. @ MOD. LINE
SCALE: 1"=1'-0"

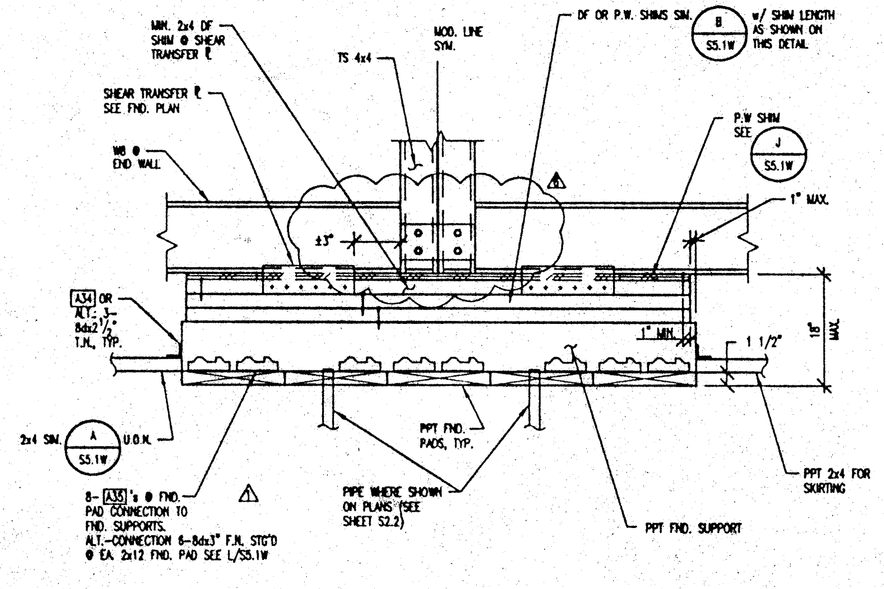

D SS.1W DET.-FTG. AT ENDWALL & MOD. LINE (END WALL)
(02/14/02) SCALE: 1" = 1'-0"

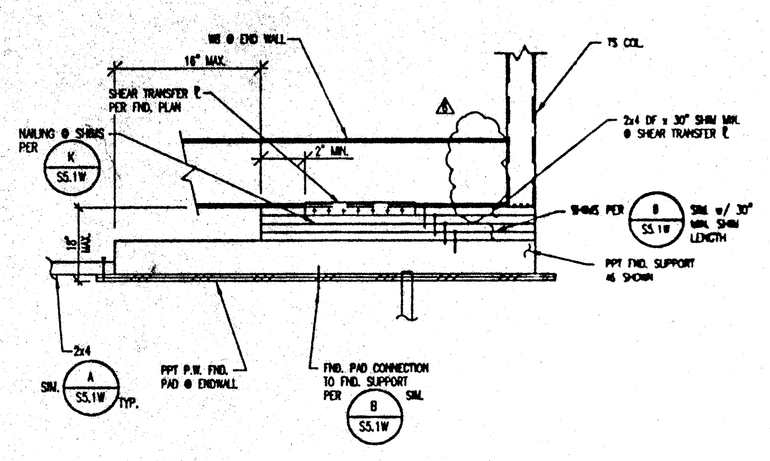

E SS.1W DET. -FTG. @ CORNERS (ENDWALL)
SCALE: 1" = 1'-0"

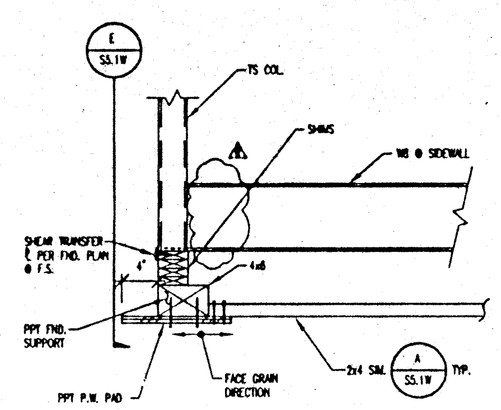

F SS.1W DET. - FTG. @ CORNERS (SIDEWALL)
(01/31/02) SCALE: 1" = 1'-0"

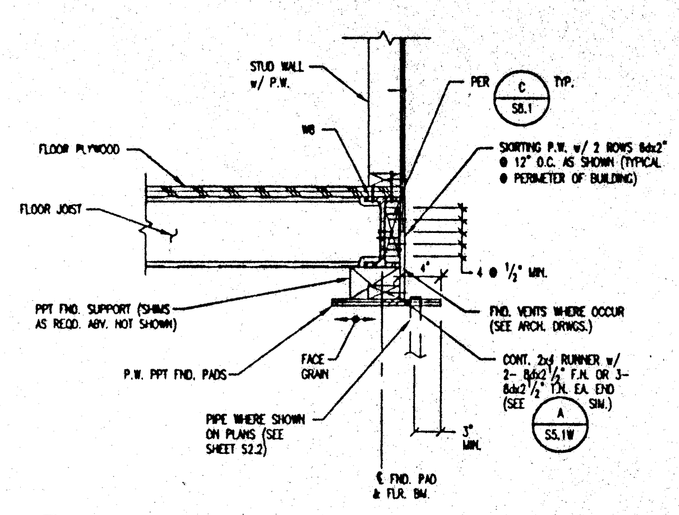

G SS.1W DET.-TYP. SKIRTING (SIDEWALL SHOWN, ENDWALL SIM.)
SCALE: 1" = 1'-0"

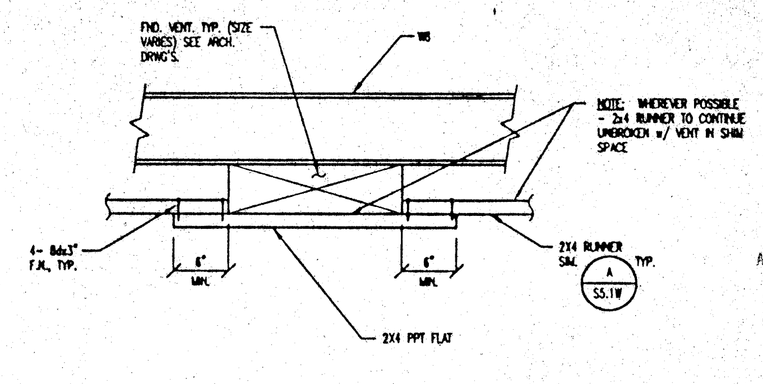

H SS.1W DET. - FND. VENT (WHERE MIN. SHIMS REQD. AT FND.'S)
SCALE: 1" = 1'-0"

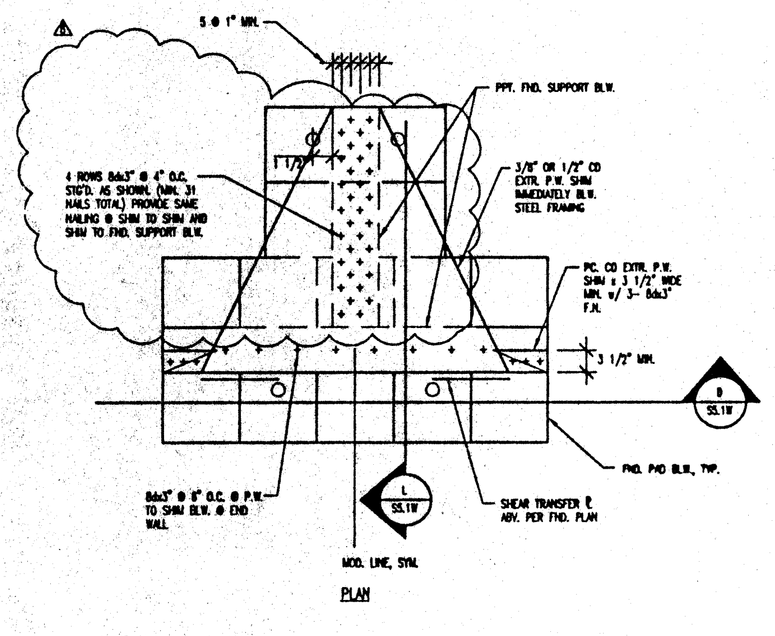

J SS.1W DET.-FTG. @ END WALL & MOD. LINE
SCALE: 3/4"=1'-0"

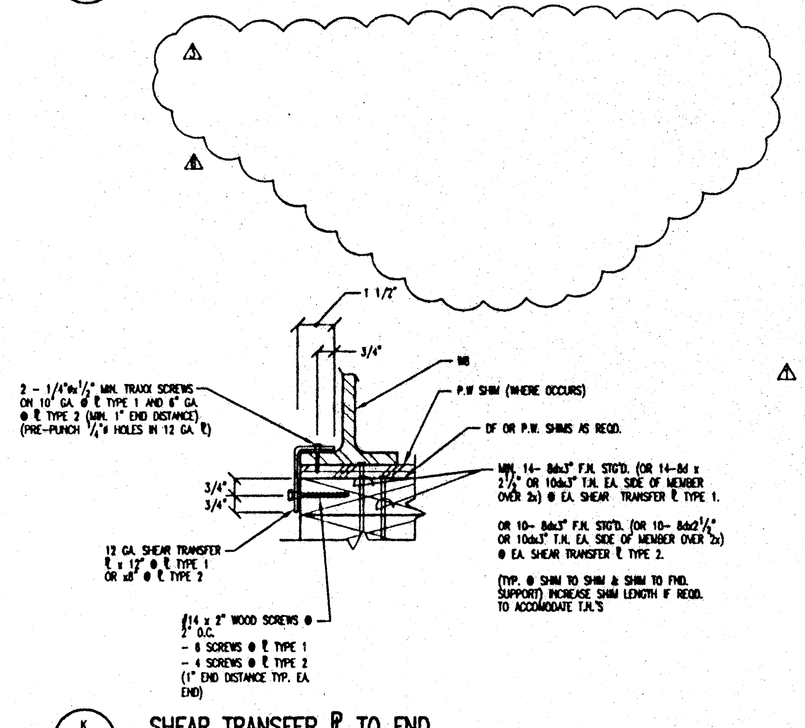

K SS.1W SHEAR TRANSFER ℄ TO FND.
SCALE: 3"=1'-0"

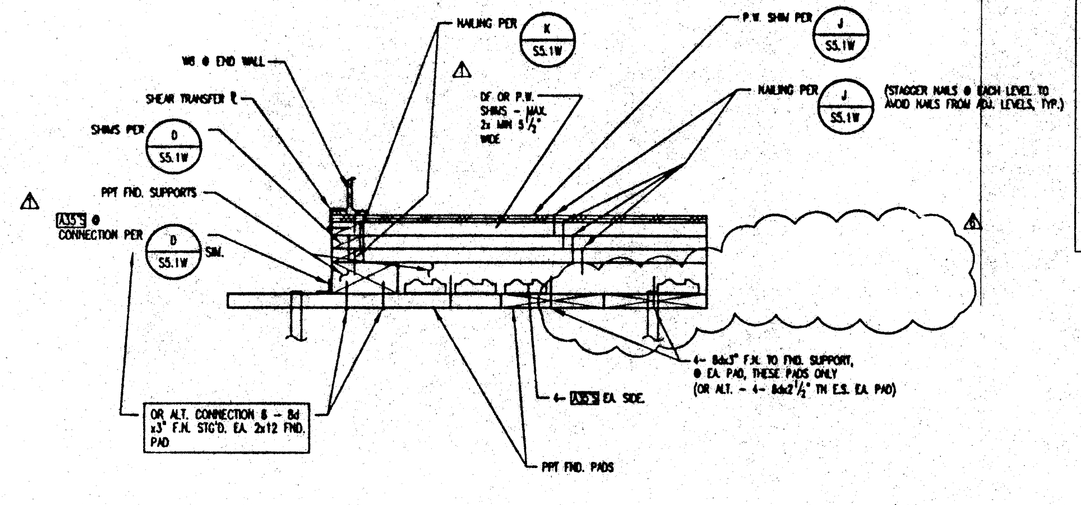

L SS.1W DET.-FTG. @ ENDWALL & MOD LINE (ALONG MOD. LINE)
SCALE: 1"=1'-0"

REVISIONS	BY
1 5-22-97	BD
2 8-30-97/NO CHANGE	BD
3 7-29-97	BD
4 8-27-97/NO CHANGE	BD
5 80 MPH - SEE ALT. SHTS.	BD
6 10-14-97	BD

PACESETTER INDUSTRIES, INC.

P.O. BOX 1131, MODESTO, CA 95353 (209) 521-1600

24x40 RELOCATABLE BUILDING

WOOD FOUNDATION DETAILS

IDENTIFICATION STAMP
DIV OF THE STATE ARCHITECT
APPROVED
AC ___ FLS ___ SS ___
DATE ___

LICENSED ARCHITECT STEPHEN J. CORBIN No. C-16788 STATE OF CALIFORNIA

REGISTERED PROFESSIONAL ENGINEER BRUCE D. DOIG No. C-23918 STRUCTURAL STATE OF CALIFORNIA

EXPIRES 3-31-00

THESE DRAWINGS AND / OR SPECIFICATIONS AND / OR CALCULATIONS FOR THE ITEMS LISTED BELOW HAVE BEEN PREPARED BY OTHER DESIGN PROFESSIONALS WHO ARE LICENSED AND AUTHORIZED TO PREPARED SUCH DRAWINGS IN THIS STATE. THESE DOCUMENTS HAVE BEEN EXAMINED BY ME AND HAVE BEEN FOUND TO MEET THE APPROPRIATE REQUIREMENTS OF TITLE 24, CALIFORNIA CODE OF REGULATIONS AND THE PROJECT SPECIFICATIONS PREPARED BY ME.
THE ITEMS LISTED BELOW ARE ACCEPTABLE FOR INCORPORATION INTO THE CONSTRUCTION OF THIS PROJECT FOR WHICH I AM THE INDIVIDUAL DESIGNATED TO BE IN GENERAL RESPONSIBLE CHARGE (OR FOR WHICH I HAVE BEEN DELIGATED RESPONSIBILITY FOR THIS PORTION OF THE WORK).
A LIST OF ITEMS HAVE BE REVIEWED AND ACCEPTED. (FOR DRAWINGS, A LIST OF ALL ACCEPTED DRAWINGS ARE ATTACHED ON SHEET NO. ___).

Stephen J. Corbin, NCARB, AIA DATE 10/14/97
LICENSE # C-16788
EXP. DATE 11/30/01

ANDERSON & DOIG STRUCTURAL ENGINEERS
A CALIFORNIA CORPORATION
3030 B PLACER LANE, STE. 100, SACRAMENTO, CA 95827
(916) 364-9622 (FAX 916) 364-9623

△ - REVISED

IDENTIFICATION STAMP
DIV. OF THE STATE ARCHITECT
OFFICE OF REGULATION SERVICES
PC-330
AC ___ FLS: ___ SS: SPS
DATE: NOV 20 1997

24'x40' BLDG.

DESIGN (1995 CBC)				
ROOF LIVE LOAD	=	20	PSF	(max)
FLOOR LIVE LOAD	=	50	PSF	
WIND	=	75	MPH	EXP C
SEISMIC ZONE	=	4		

DRAWN	JR
CHECKED	BD/PLS
DATE	10-14-97
SCALE	AS NOTED
JOB NO.	97007 PSPC1
SHEET	S5.1W
OF	SHEETS

D:\PROJECTS\PROJ_97\97007_PSPC1\S5_1W.dwg Tue Oct 14 15:25:09 1997