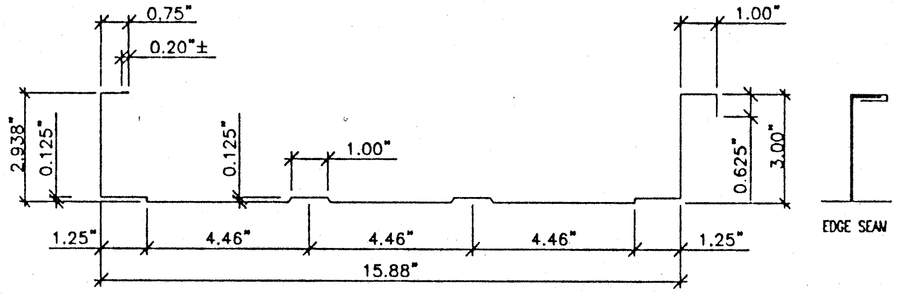

PANEL GAGE	THICKNESS	FY (ksi)	POSITIVE BENDING		NEGATIVE BENDING	
			Ixp (IN^4)	Sxp (IN^3)	Ixn (IN^4)	Sxn (IN^3)
22	0.030"	50	0.749	0.252	0.517	0.294

NOTES:
1. SECTION PROPERTIES SHOWN ABOVE ARE THE EFFECTIVE SECTION PROPERTIES @ YIELD FOR 'Sx' AND AT MAX. ALLOWABLE STRESS FOR 'Ix' PER 16" PANEL.
2. METAL ROOF PANELS SHALL BE KNUDSON KR18 STANDING SEAM PANELS OR APPROVED EQUIVALENT.
3. PANEL MATERIAL SHALL BE ASTM A653 GRADE D (Fy=50ksi).
4. METAL ROOF PANELS SHALL BE CONTINUOUS OVER 2 SPANS MINIMUM. (CONTINUOUS OVER 2 SPANS PLUS OVERHANG MINIMUM AT ENDS).
5. SEE ARCH. DRAWINGS FOR CONNECTORS (INCLUDING PANEL TO STRUCTURE CONNECTORS).
6. SEE ARCH. DRAWINGS FOR FINISHES.

A / S2.5 METAL ROOF PANEL MINIMUM SECTION PROPERTIES
SCALE: N.T.S.

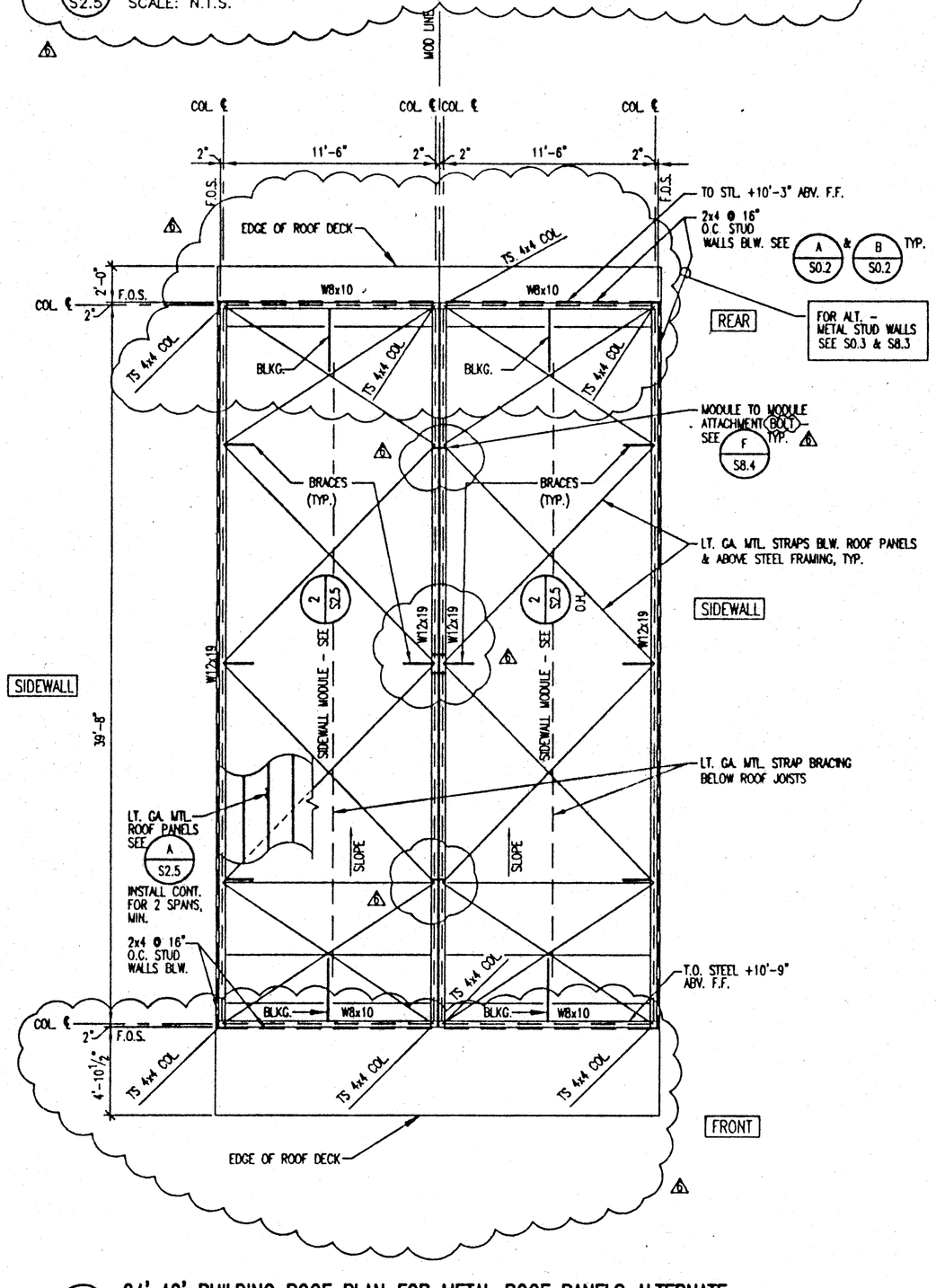

1 / S2.5 24'x40' BUILDING ROOF PLAN FOR METAL ROOF PANELS ALTERNATE
SCALE: 3/16"=1'-0"

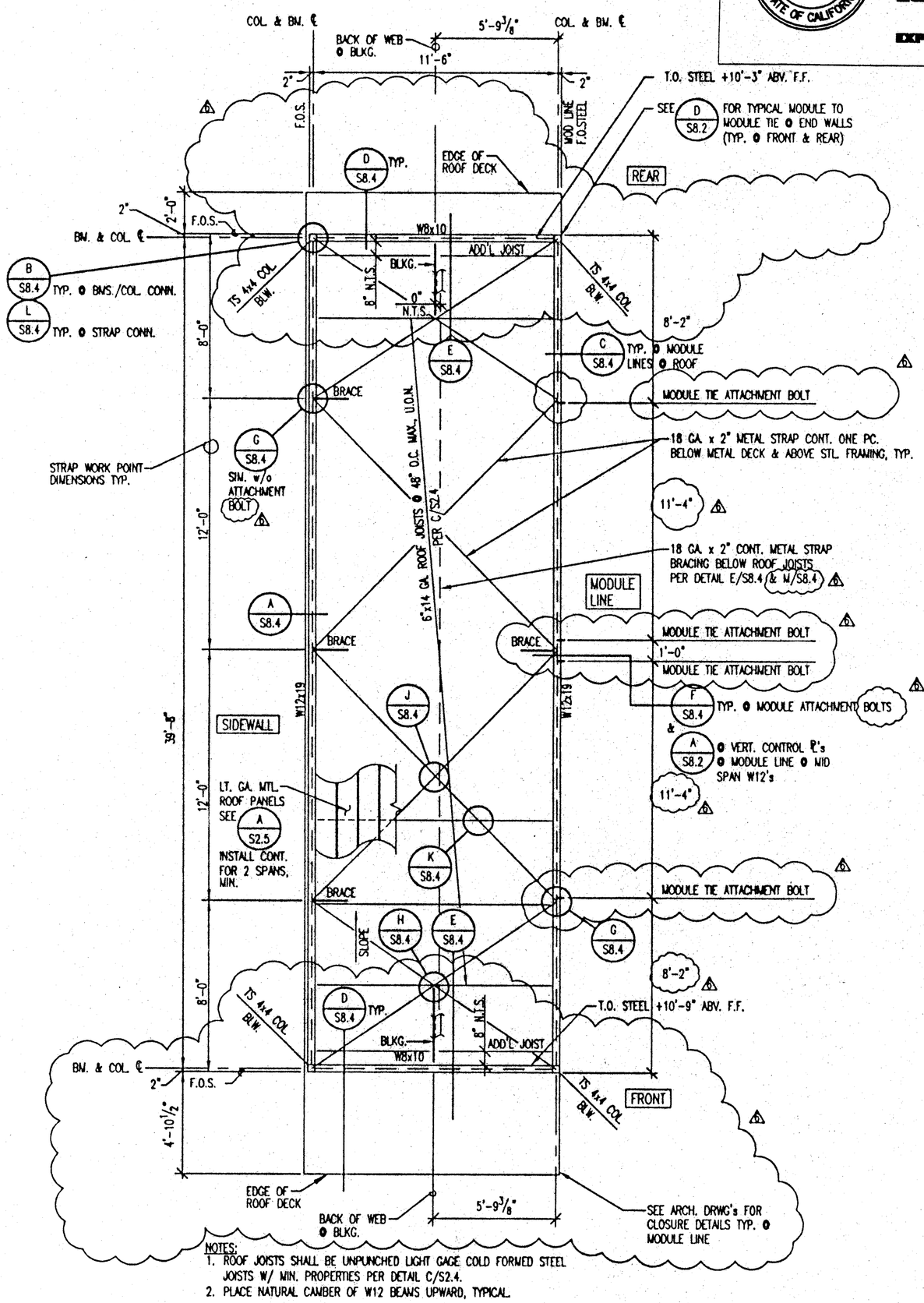

NOTES:
1. ROOF JOISTS SHALL BE UNPUNCHED LIGHT GAGE COLD FORMED STEEL JOISTS W/ MIN. PROPERTIES PER DETAIL C/S2.4.
2. PLACE NATURAL CAMBER OF W12 BEAMS UPWARD, TYPICAL.

2 / S2.5 TYP. ROOF PLAN FOR METAL ROOF PANELS ALTERNATE - SIDEWALL MODULE
SCALE: 1/4"=1'-0" (AS SHOWN OR O.H.)

THESE DRAWINGS AND / OR SPECIFICATIONS AND / OR CALCULATIONS FOR THE ITEMS LISTED BELOW HAVE BEEN PREPARED BY OTHER DESIGN PROFESSIONALS WHO ARE LICENSED AND AUTHORIZED TO PREPARED SUCH DRAWINGS IN THIS STATE. THESE DOCUMENTS HAVE BEEN EXAMINED BY ME AND HAVE BEEN FOUND TO MEET THE APPROPRIATE REQUIREMENTS OF TITLE 24, CALIFORNIA CODE OF REGULATIONS AND THE PROJECT SPECIFICATIONS PREPARED BY ME.
THE ITEMS LISTED BELOW ARE ACCEPTABLE FOR INCORPORATION INTO THE CONSTRUCTION OF THIS PROJECT FOR WHICH I AM THE INDIVIDUAL DESIGNATED TO BE IN GENERAL RESPONSIBLE CHARGE (OR FOR WHICH I HAVE BEEN DELIGATED RESPONSIBILITY FOR THIS PORTION OF THE WORK).
LIST ITEMS REVIEWED AND ACCEPTED. (FOR DRAWINGS, A LIST OF ALL ACCEPTED DRAWINGS ARE TO BE ATTACHED).

LICENSED ARCHITECT STEPHEN L. COBB No. C-16788 REN. 11/30/01 STATE OF CALIFORNIA

Stephen L. Cobb, B.Arch., AIA DATE 05/1/00
LICENSE # C-16788
EXP. DATE 11/30/01

REVISIONS	BY
1 8-27-97/SHEET ADDED	BD
2 80 MPH - SEE ALT. SHTS.	BD
3 10-14-97	BD

PACESETTER INDUSTRIES, INC.
P.O. BOX 1131, MODESTO, CA 95353 (209) 521-1600

24x40 RELOCATABLE BUILDING

ROOF PLANS FOR METAL ROOF PANELS ALTERNATE

NOTE: SEE S0.3 & S8.3 TYP. FOR METAL STUD WALL ALTERNATE

REGISTERED PROFESSIONAL ENGINEER BRUCE D. DOIG No. 2529 STRUCTURAL STATE OF CALIFORNIA
EXPIRES 3-31-00

LICENSED ARCHITECT NORMAN A. GEIGER C-29016 10-31-99 RENEWAL DATE STATE OF CALIFORNIA

ANDERSON & DOIG STRUCTURAL ENGINEERS
A CALIFORNIA CORPORATION
10308 PLACER LANE, STE. 100, SACRAMENTO, CA. 95827-2531
(916) 366-9622 FAX (916) 366-9623

IDENTIFICATION STAMP DIV. OF THE STATE ARCHITECT
APPRO. 12 10
AC FLS SSI
DATE

1 - REVISED

IDENTIFICATION STAMP DIV. OF THE STATE ARCHITECT OFFICE OF REGULATION SERVICES
PC-330
AC. FLS. SS.
DATE: NOV 20 1997

24'x40' BLDG.

DESIGN (1995 CBC)			
ROOF LINE LOAD	=	20	PSF
FLOOR LINE LOAD	=	50	PSF
WIND	=	75	MPH
SEISMIC ZONE	=	4	

DRAWN	MM
CHECKED	BD/PLS
DATE	10-14-97
SCALE	AS NOTED
JOB NO.	97007 PSPC1
SHEET	S2.5

I:\PROJECTS\PROJ_97\97007_PSPC1\S2.5.dwg Tue Oct 14 15:14:31 1997