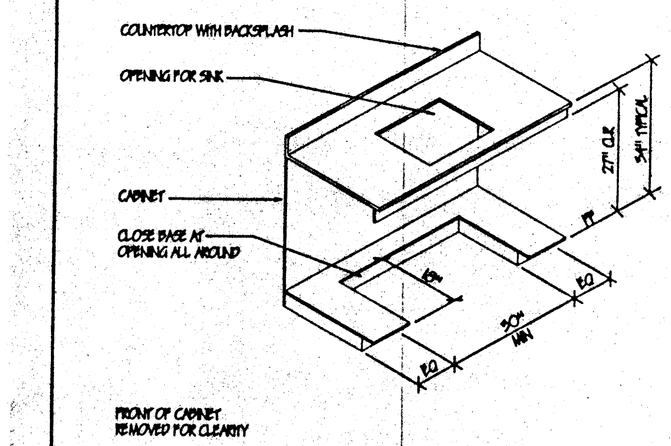

1 ACCESSIBLE CASEWORK SCALE: 1/2"=1'-0"

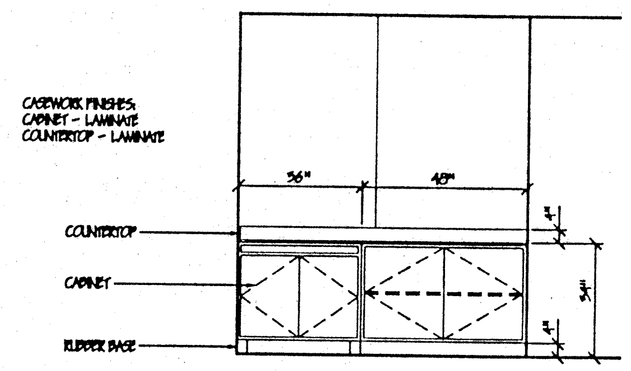

4 CASEWORK ELEVATIONS SCALE: 3/8"=1'-0"

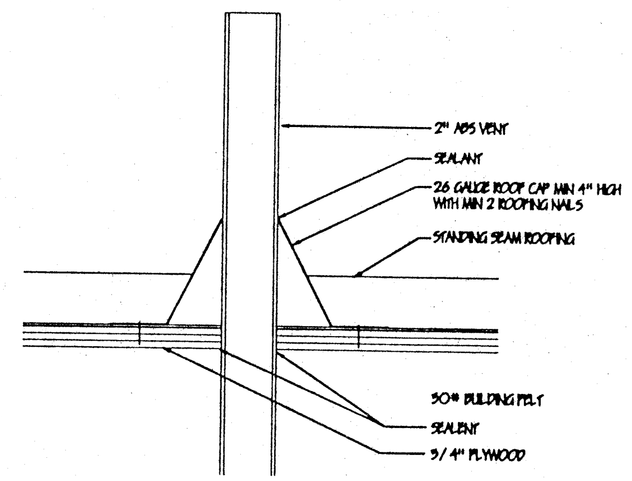

5 VENT AT ROOF SCALE: 3"=1'-0"

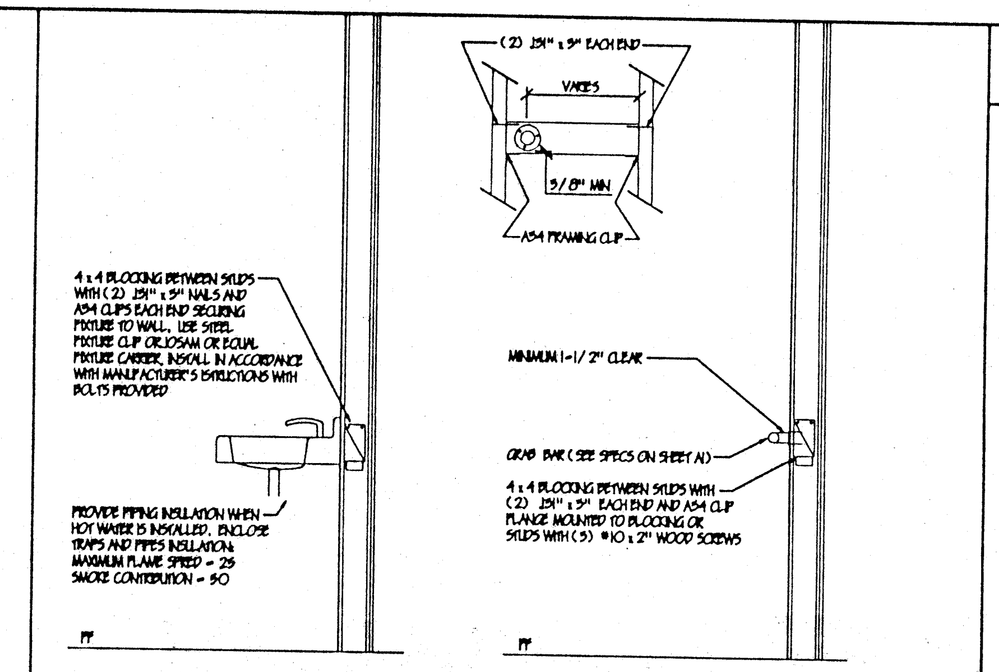

6 ATTACHMENT DETAILS SCALE: 1-1/2"=1'-0"

GENERAL NOTES

THE SEISMIC ANCHORAGE OF PLUMBING EQUIPMENT SHALL CONFORM TO CCR TITLE 24. (SEE STRUCTURAL DRAWINGS)

ANCHORAGE DETAILS FOR ROOF / FLOOR MOUNTED EQUIPMENT LESS THAN 400 POUNDS AND HUNG EQUIPMENT LESS THAN 20 POUNDS MAY BE OMITTED FROM THE DRAWINGS.

ALL PLUMBING EQUIPMENT SHALL BE BRACED OR ANCHORED TO RESIST A HORIZONTAL FORCE ACTING IN ANY DIRECTION USING THE FOLLOWING EQUIP. ON GRADE: 20% OF OPERATION WEIGHT EQUIP. ON STRUCTURE: 50% OF OPERATING WEIGHT FOR FLEXIBLY MOUNTED EQUIPMENT USE 4 TIMES THE ABOVE VALUES. FOR SIMULTANEOUS VERTICAL FORCE USE 1/3 TIMES THE HORIZONTAL FORCE. THE ABOVE VALUES ARE FOR AN IMPORTANCE FACTOR, I=1.0 AND SEISMIC ZONE, Z=.4

WHERE ANCHORAGE DETAILS ARE NOT SHOWN, THE FIELD INSTALLATION SHALL BE SUBJECT TO THE APPROVAL OF THE MECHANICAL ENGINEER, AND THE FIELD ENGINEER OF DSA.

WHEN MATERIALS ARE INSTALLED WITHIN CONCEALED SPACES, THE FLAME SPREAD AND SMOKE DEVELOPED LIMITATIONS DO NOT APPLY TO FACINGS IF THE FACINGS ARE INSTALLED IN SUBSTANTIAL CONTACT WITH THE UNEXPOSED SURFACES OF THE CEILING, FLOOR, OR WALL FINISHES. (SECTION 707.5 CBC)

ALL FINISHES SHALL COMPLY WITH CBC CHAPTERS 3, 6, 7, 8, AND 10

SEE SHEET A1 FOR GENERAL SPECIFICATIONS AND VARIABLE SPECIFICATIONS

SEE SHEET S0.1 FOR STRUCTURAL NOTES
SEE DETAIL 3/S0.2 FOR STRUCTURAL FRAMING

NORMAN A. GEIGER
AIA, CSI, CDT, ICBO
P.O. BOX 41054
Sacramento, CA 95841
(916) 332-2453 FAX
(916) 332-2453 PHONE

GRAFICS ARCHITECTURAL SERVICES
GEIGER

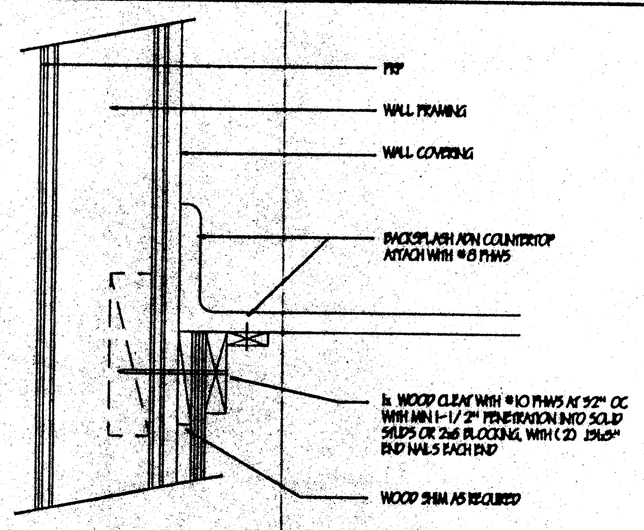

2 CASEWORK ATTACHMENT SCALE: 3"=1'-0"

THESE DRAWINGS AND / OR SPECIFICATIONS AND / OR CALCULATIONS FOR THE ITEMS LISTED BELOW HAVE BEEN PREPARED BY OTHER DESIGN PROFESSIONALS WHO ARE LICENSED AND AUTHORIZED TO PREPARED SUCH DRAWINGS IN THIS STATE. THESE DOCUMENTS HAVE BEEN EXAMINED BY ME AND HAVE BEEN FOUND TO MEET THE APPROPRIATE REQUIREMENTS OF TITLE 24, CALIFORNIA CODE OF REGULATIONS AND THE PROJECT SPECIFICATIONS PREPARED BY ME.
THE ITEMS LISTED BELOW ARE ACCEPTABLE FOR INCORPORATION INTO THE CONSTRUCTION OF THIS PROJECT FOR WHICH I AM THE INDIVIDUAL DESIGNATED TO BE IN GENERAL RESPONSIBLE CHARGE (OR FOR WHICH I HAVE BEEN DELEGATED RESPONSIBILITY FOR THIS PORTION OF THE WORK).
LIST ITEMS REVIEWED AND ACCEPTED. (FOR DRAWINGS, A LIST OF ALL ACCEPTED DRAWINGS ARE TO BE ATTACHED).

LICENSED ARCHITECT STEPHEN A. COBURN No. C-16786 REG. 11/30/01 STATE OF CALIFORNIA

[illegible], AIA DATE 08/01/00
LICENSE # C-16786
EXP. DATE 11/30/01

SYMBOLS

- BATT INSULATION
- WOOD MEMBER
- BLOCKING
- GYPSUM BOARD
- PLYWOOD
- CENTER LINE

ABBREVIATIONS:

AFF	ABOVE FINISH FLOOR
AL OR ALUM	ALUMINUM
DS	DOWNSPOUT
EQ	EQUAL
FF	FINISH FLOOR
FOS	FACE OF STUD
HM	HOLLOW METAL
MIN.	MINIMUM
MAX.	MAXIMUM
NO.	NUMBER
NR	NOT RATED
OHG	OVERHANG
PR.	PAIR
W/	WITH

APPROVALS

IDENTIFICATION STAMP
DIV. OF THE STATE ARCHITECT

IDENTIFICATION STAMP
REV. OF THE STATE ARCHITECT
OFFICE OF REGULATION SERVICES
PC-330
NO. 1.0 FLS. ED. KPK
DATE 9/4/97

PACESETTER INDUSTRIES, INC.

P.O. BOX 1131, MODESTO, CA 95353 (209) 521-1600

24x40 RELOCATABLE BUILDING

SHEET CONTENTS:
PLUMBING FLOOR PLAN
PLUMBING SCHEMATIC
ABBREVIATIONS
GENERAL NOTES
DETAILS

DATE:	JUNE 9, 1997
REV. #3	AUGUST 1, 1997
REV. #4	AUGUST 26, 1997
DRAWING SCALE:	AS SHOWN
PROJECT NUMBER:	97-05
SHEET	P1
OF	

ALL WASTE AND VENT PIPING TO COMPLY WITH THE CALIFORNIA PLUMBING CODE (CPC).

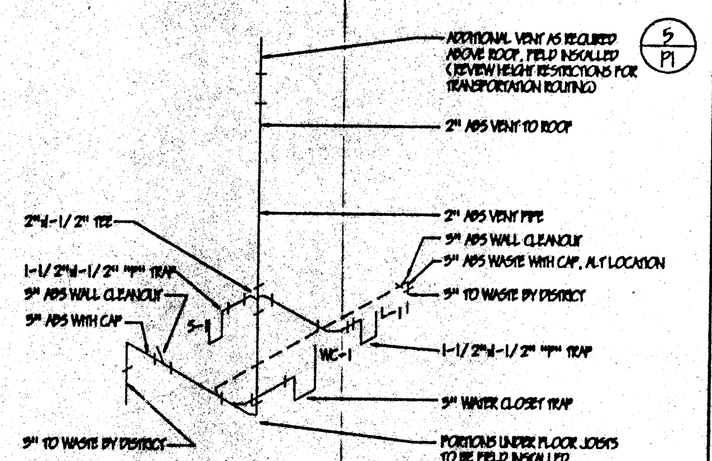

TYPICAL WASTE AND VENT SYSTEM
INSULATE HOT WATER PIPING AND DRAIN AT UNDERSINK AREAS
SUPPORT AT 4'-0" OC AND AT ALL TURNS WITH 5/4" METAL PLUMBING STRAPS

3 WASTE AND VENT SCHEMATIC SCALE: NONE

S-1 SINK:
ELKAY OR EQUAL #2227-L or R-C SINGLE BOWL STAINLESS STEEL SINK, 18 GAUGE TYPE 302, SELF RIMMING, FURNISHED WITH LK-2009-13 GOOSE NECK FAUCET, LK-1141 NO LEAD PLEX-GUARD RUBBER, AND LK-99 STRAINER 6 1/2" MIN DEPTH OF SINK. LEVER FAUCET OR EQUAL

L-1 LAV:
AMERICAN STANDARD 0355.021 LUCERNE, 20" x 15" WITH J.R. SMITH 700 CONCEALED HANGER, HC FAUCET, OFFSET P TRAP

WC-1 WATER CLOSET
AMERICAN STANDARD 2216.145 CADET II, FLOOR MOUNTED, SIPHON JET, SMITH 700 CONCEALED HANGER, HC FAUCET, OFFSET P TRAP

GRAB BARS:
BOBRICK B-5100-36 AND B-5108-42, OR EQUAL, 1-1/2" O SATIN FINISH STAINLESS STEEL

MIRROR:
SURFACE MOUNTED, BOBRICK B-806-14, OR EQUAL, 18" x 30"

SOAP DISPENSER:
SURFACE MOUNTED, GRAFFIX FEED, MODEL NUMBER 1153-30, OR EQUAL

TOILET PAPER DISPENSER:
SURFACE MOUNTED, SINGLE, JAMES SERVER MODEL NUMBER 6145-T3, OR EQUAL, CHROME

PAPER TOWEL DISPENSER:
SURFACE MOUNTED, C-FOLD, OWELS MODEL NUMBER 9727-C2, OR EQUAL, CHROME

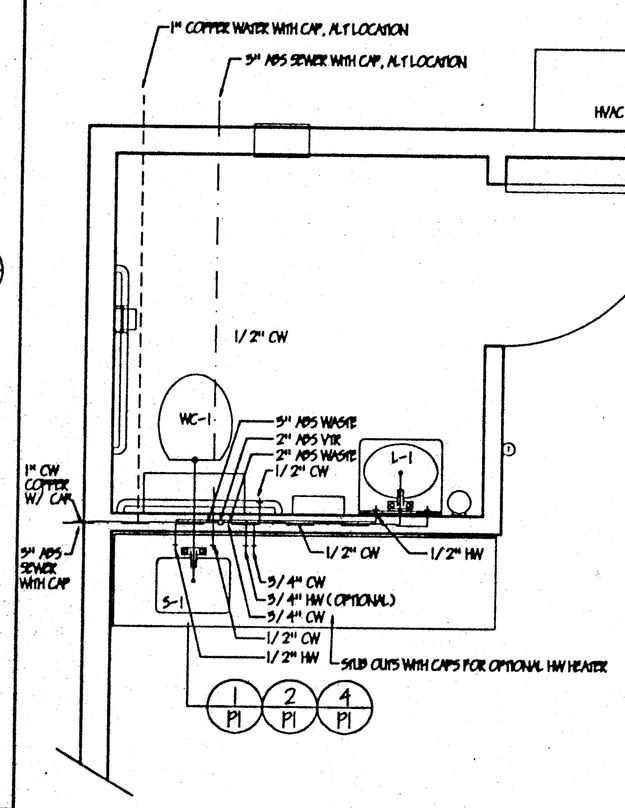

WASTE, WATER, VENT PLAN SCALE: 1/2"=1'-0"

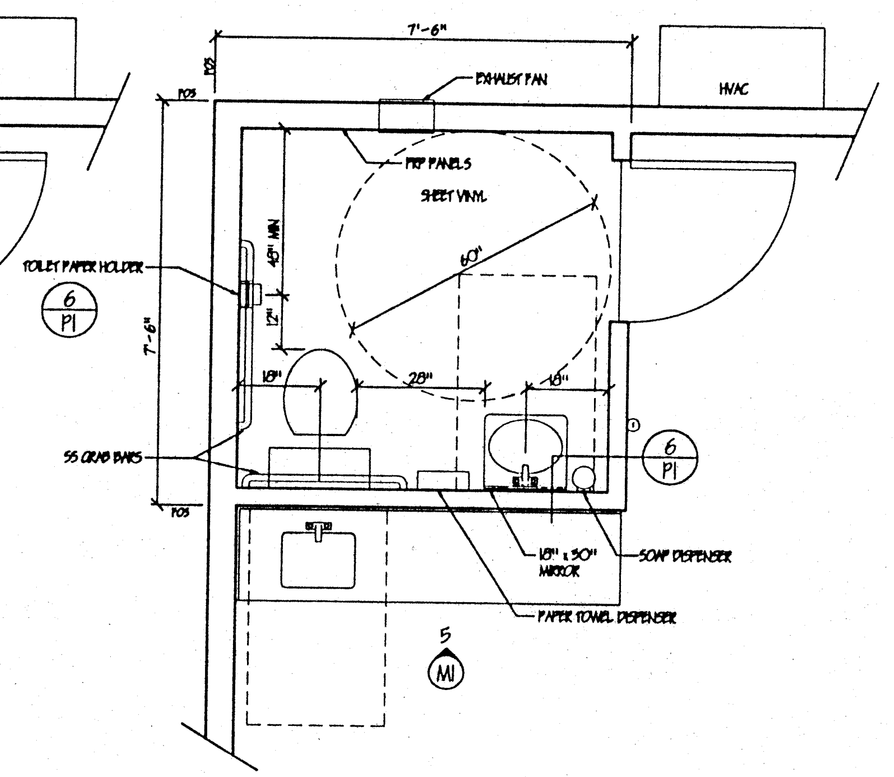

24'x40' ALT. RESTROOM PLAN SCALE: 1/2"=1'-0"

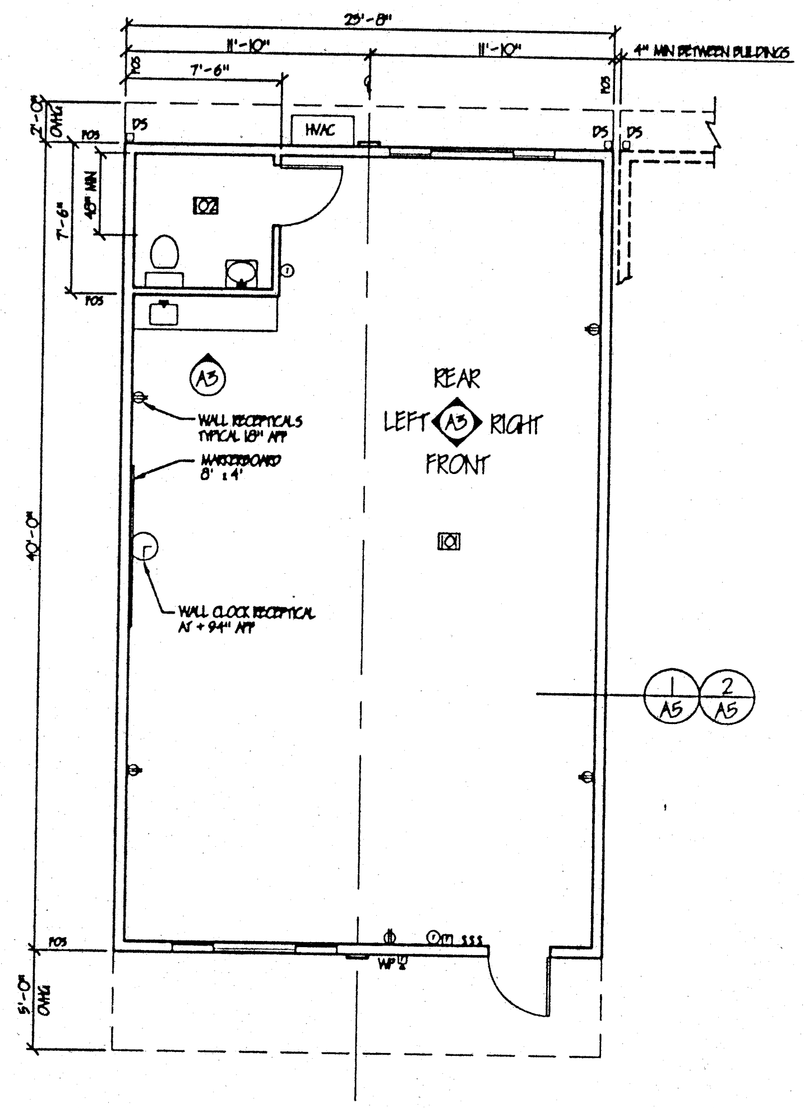

24'x40' ALT. PLUMBING FLOOR PLAN SCALE: 3/16"=1'-0"

COMPUTER SCALE: 3/16"=1'-0"