HDR. SCHEDULE				
SPAN (OPNG. WIDTH)	STUD WALL	HDR. SIZE	8d(3") NAILS EA. END HDR. (FROM TRIMMER)	TRIMMERS E.S. OF OPENING
4'-0" MAX.	2x4	4x4 (1)	4	2- 2x4
6'-0" MAX.	2x4	4x6 (1)	6	3- 2x4
8'-0" MAX.	2x4	4x8 (1)	8	3- 2x4 △1

NOTE (1): SEE L/S0.2 FOR ALT. HDRS.

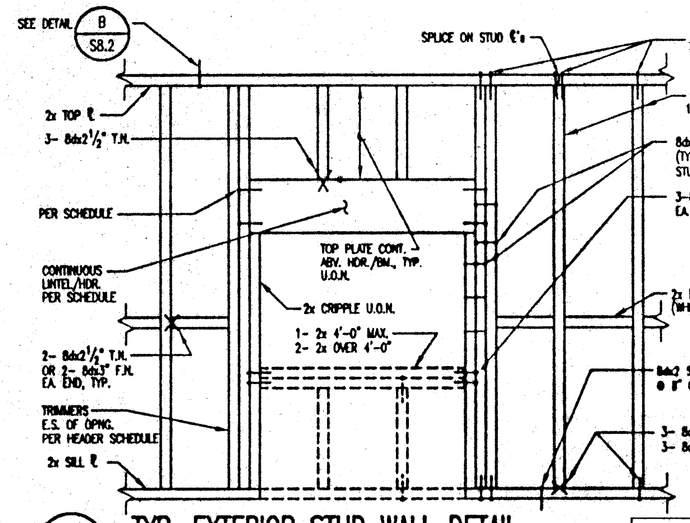

A/S0.2 TYP. EXTERIOR STUD WALL DETAIL

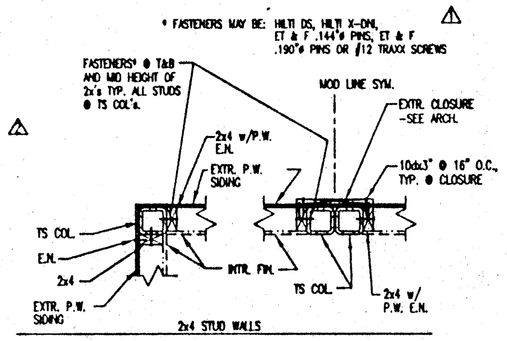

TYPICAL CORNER DETAILS - PLAN VIEW

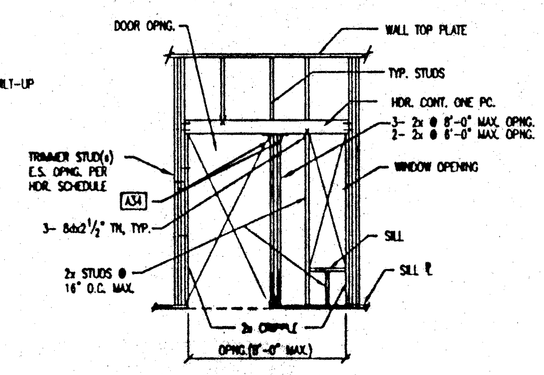

ALT. CONFIGURATION AT DOOR/WND. OPNG.
(INFO NOT NOTED SIM. DETAIL @ LEFT, TYP.)

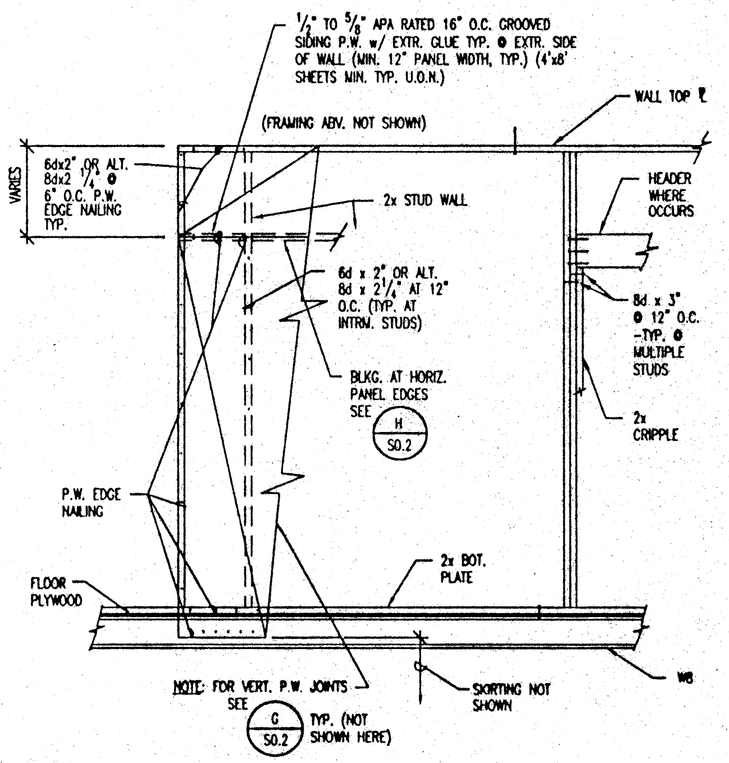

B/S0.2 TYP. DET. - EXTR. STUD WALL SHEATHING

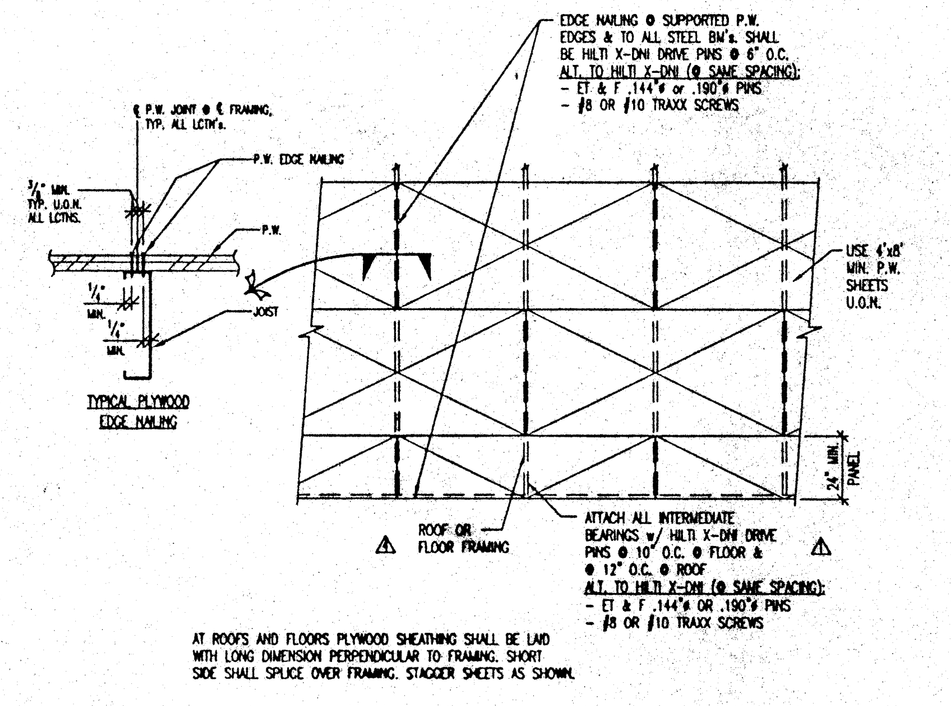

AT ROOFS AND FLOORS PLYWOOD SHEATHING SHALL BE LAID WITH LONG DIMENSION PERPENDICULAR TO FRAMING. SHORT SIDE SHALL SPLICE OVER FRAMING. STAGGER SHEETS AS SHOWN.

C/S0.2 TYP. P.W. SHEATHING DETAIL (ROOF & FLOOR)

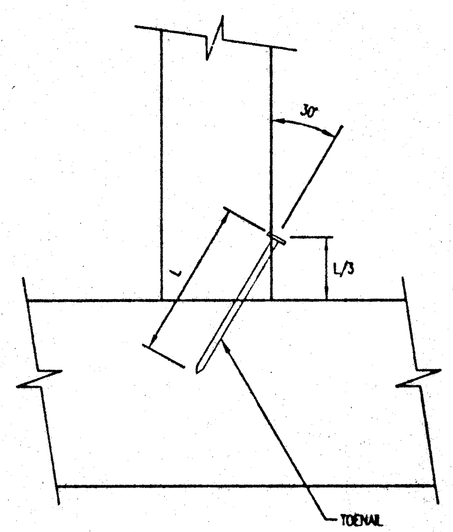

D/S0.2 TYPICAL TOENAIL DETAIL

NOTE: SEE ALSO J/S0.2 FOR FRAMING OF OPNG. IN STUD WALLS @ WALL MOUNTED HVAC UNITS

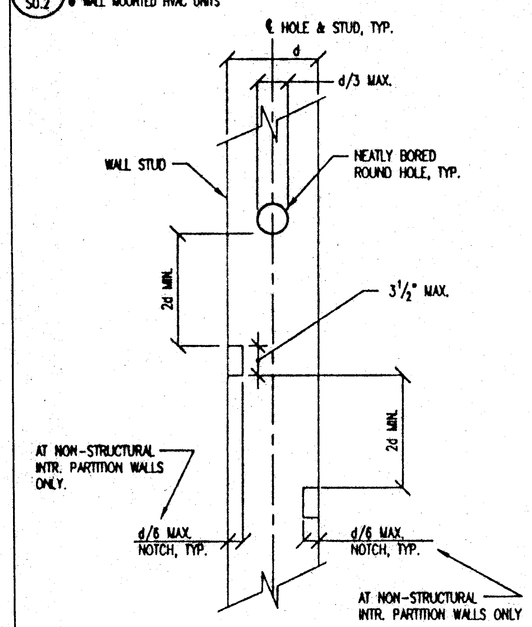

E/S0.2 ALLOW. CUTS IN WALL STUDS

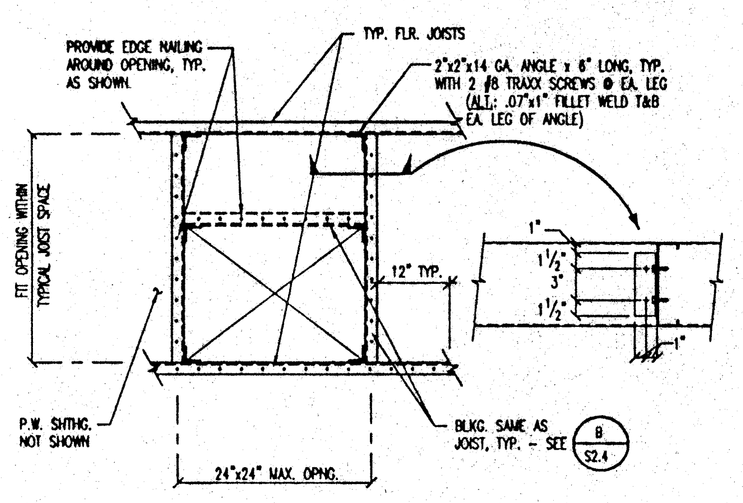

F/S0.2 DET.-TYP. FLOOR FRAMING @ OPENING

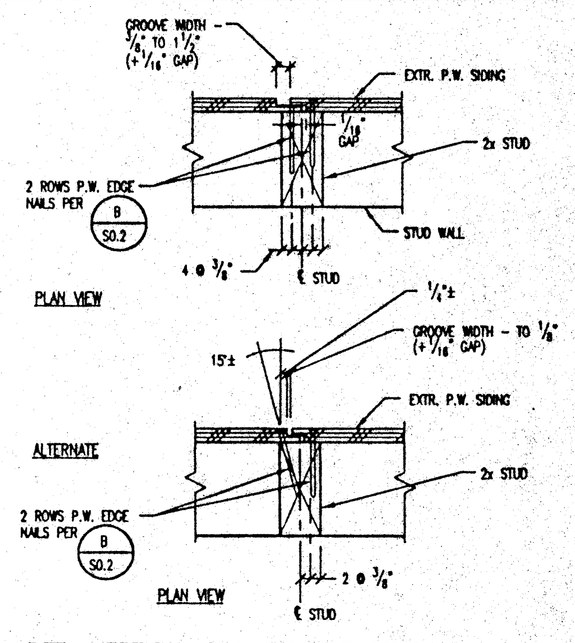

G/S0.2 DET.-VERTICAL P.W. JOINT @ WALL

NOTE: COMPLY WITH ALL APA RECOMMENDATIONS FOR SIDING PLYWOOD INSTALLATION, TYPICAL.

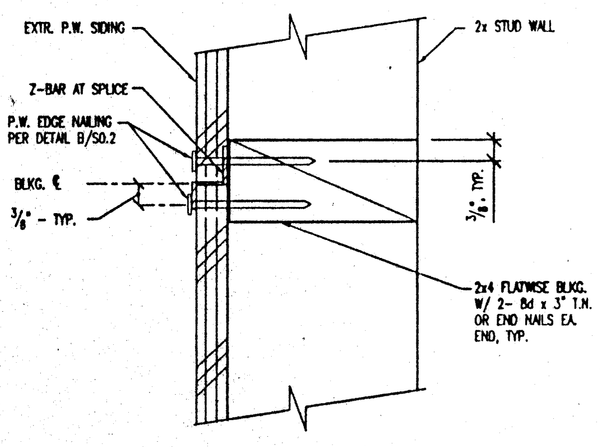

H/S0.2 DET.-HORIZ. P.W. JOINT @ WALL

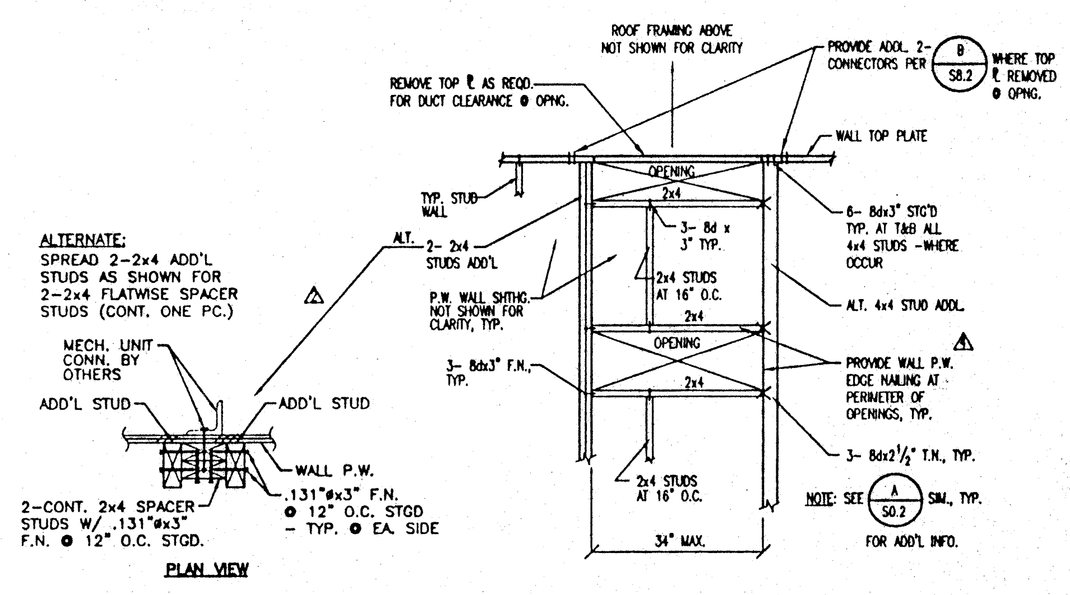

J/S0.2 TYP. HVAC FRAMING DET. @ STUD WALL
(@ WALL MOUNTED UNIT)

SIMPSON STRONG-TIE CONNECTORS SHOWN ON DRAWINGS	ALTERNATE - SILVER/USP LUMBER CONNECTOR
A34	A2
A35	A5A
ST18	ST18
PSCL	PC

NOTE:
USP LUMBER CONNECTORS BY UNITED STEEL PRODUCTS SHALL BE INSTALLED IN ACCORDANCE WITH ICBO REPORT 2039.

K/S0.2 ACCEPTABLE ALTERNATE FRAMING CONNECTOR TABLE

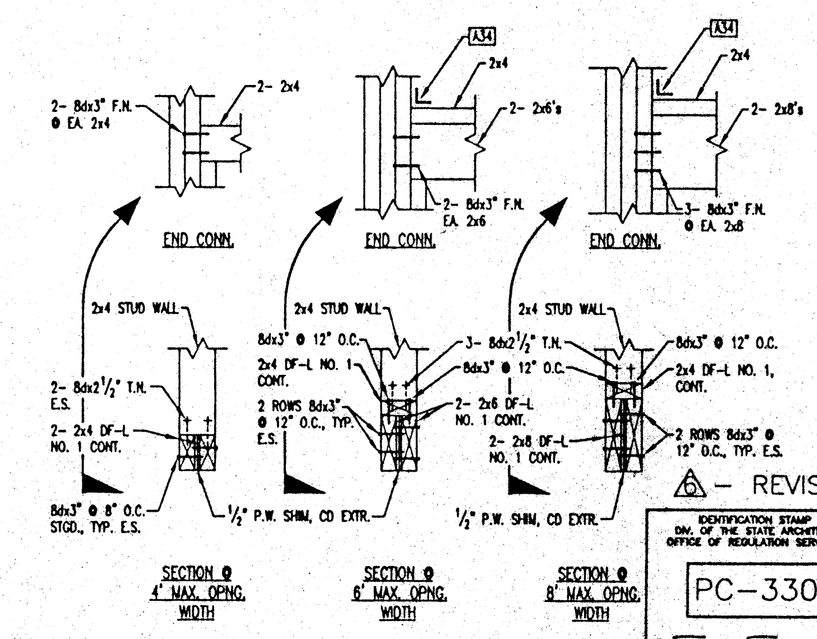

NOTE: ALL MEMBERS CONT. ONE PC. (EXCEPT P.W. SHIMS.)

L/S0.2 ALT. WOOD STUD WALL HDR's DETAIL

DESIGN (1995 CBC)			
ROOF LIVE LOAD	=	20	PSF
FLOOR LIVE LOAD	=	50	PSF
WIND	=	75	MPH
SEISMIC ZONE	=	4	

24'x40' BLDG.

IDENTIFICATION STAMP
DIV. OF THE STATE ARCHITECT
OFFICE OF REGULATION SERVICES
PC-330
ACC. ___ FLS. ___ SS. 1995
DATE NOV 20 1997

△ - REVISED

REVISIONS	BY
△1 5-22-97	BD
△2 6-30-97	BD
△3 7-29-97/NO CHANGE	BD
△4 8-27-97	BD
△5 80 MPH - SEE ALT. SHTS.	BD
△6 10-14-97	BD

PACESETTER INDUSTRIES, INC.

P.O. BOX 1131, MODESTO, CA 95353 (209) 521-1600

24x40 RELOCATABLE BUILDING

TYPICAL DETAILS

REGISTERED PROFESSIONAL ENGINEER BRUCE D. DOIG No. 2525 STRUCTURAL STATE OF CALIFORNIA

EXPIRES 3-31-00

ANDERSON & DOIG STRUCTURAL ENGINEERS
A CALIFORNIA CORPORATION
10338 PLACER LANE, STE. 100, SACRAMENTO, CA 95827-2511
(916) 366-9422 FAX (916) 366-9423

DRAWN	JR
CHECKED	BD/PLS
DATE	10-14-97
SCALE	N.T.S.
JOB NO.	97007 PSPC1
SHEET	S0.2
OF	SHEETS

THESE DRAWINGS AND / OR SPECIFICATIONS AND / OR CALCULATIONS FOR THE ITEMS LISTED BELOW HAVE BEEN PREPARED BY PERSONS NOT LICENSED AS ARCHITECTS OR ENGINEERS IN THE STATE. THESE DOCUMENTS HAVE BEEN EXAMINED BY ME AND HAVE BEEN FOUND TO MEET THE APPROPRIATE REQUIREMENTS OF TITLE 24, CALIFORNIA CODE OF REGULATIONS AND THE PROJECT SPECIFICATIONS PREPARED THE ITEMS LISTED BELOW ARE ACCEPTABLE FOR INCORPORATION INTO THE CONSTRUCTION OF THIS PROJECT. I AM ADOPTING THESE DOCUMENTS AS PART OF MY RESPONSIBLE CHARGE / (OR FOR WHICH I HAVE BEEN DELEGATED RESPONSIBILITY FOR THIS PORTION OF THE WORK.)
THE ITEMS LISTED BELOW HAVE BEEN REVIEWED AND ACCEPTED. (FOR DRAWINGS, ALIST OF ALL ACCEPTED DRAWINGS ARE TO BE ATTACHED.).

LICENSED ARCHITECT STEPHEN K. CONRAD No. C-16756 REN. DATE STATE OF CALIFORNIA
LICENSE # C-16756
EXP. DATE 11/30/01
DATE 08/24/97

IDENTIFICATION STAMP
DIV. OF THE STATE ARCHITECT
APPROVED
ACC. ___ FLS. ___ SS. ___
DATE FEB 2 2 1999

LICENSED ARCHITECT NORMANDA L. BEISER C-23916 RENEWAL DATE 10-29 STATE OF CALIFORNIA

D:\PROJECTS\PROJ_97\97007_PSPC1\S0_2.dwg Tue Oct 14 14:42:48 1997