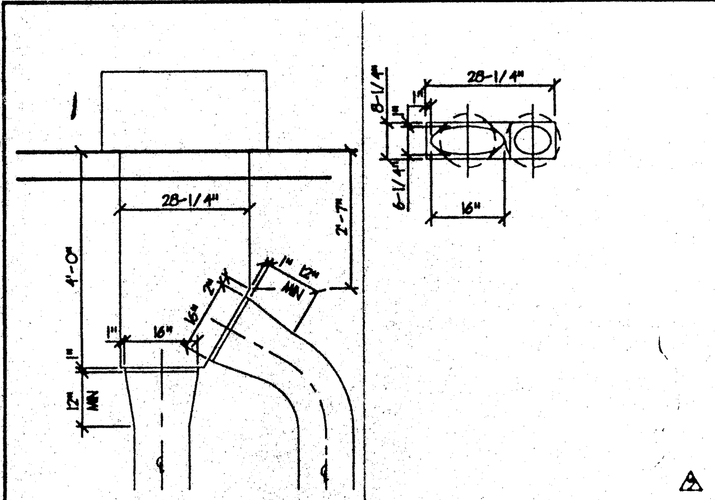

4 ALT. PLENUM DETAILS

SCALE: 1/2"=1'-0"

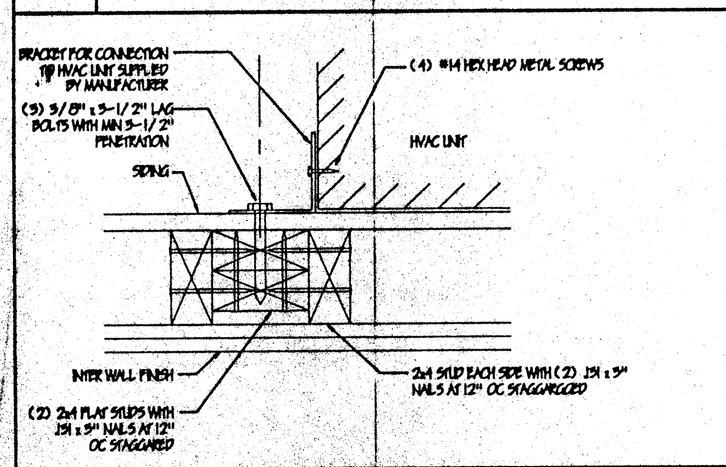

3 ALT. WALL FRAMING AT HVAC

SCALE: 3/4"=1'-0"

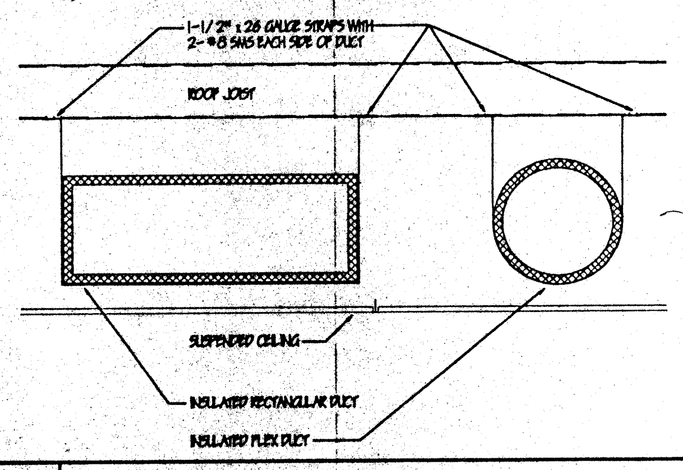

2 DUCT MOUNTING

SCALE: 1"=1'-0"

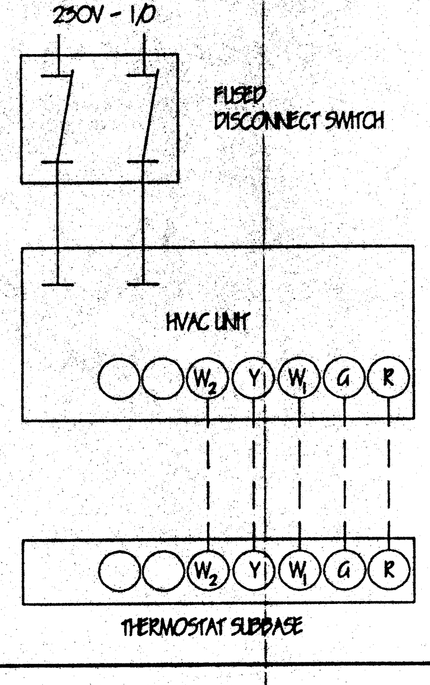

1 CONTROL SCHEMATIC

SCALE: NONE

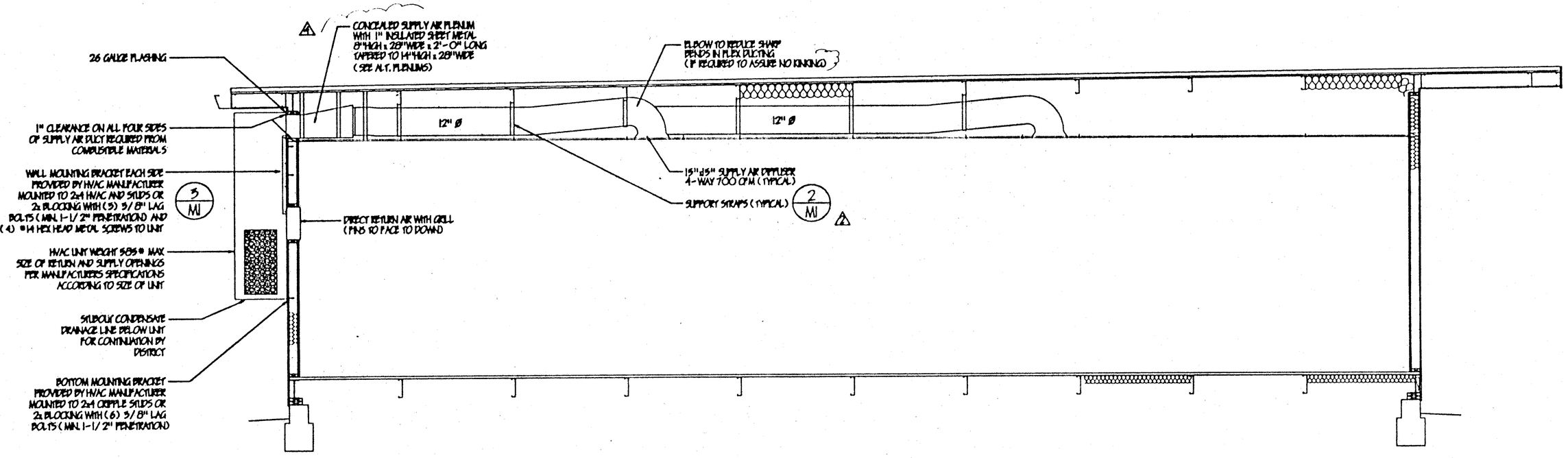

HEAT/SUPPLY AIR DUCT CROSS SECTION

SCALE: 3/8"=1'-0"

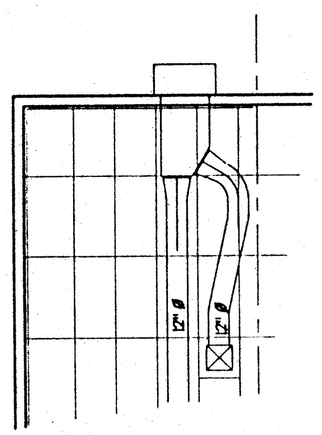

ALT. PLENUM PLANS

SCALE: 3/16"=1'-0"

THESE DRAWINGS AND / OR SPECIFICATIONS AND / OR CALCULATIONS FOR THE ITEMS LISTED BELOW HAVE BEEN PREPARED BY OTHER DESIGN PROFESSIONALS WHO ARE LICENSED AND AUTHORIZED TO PREPARED SUCH DRAWINGS IN THIS STATE. THESE DOCUMENTS HAVE BEEN EXAMINED BY ME AND HAVE BEEN FOUND TO MEET THE APPROPRIATE REQUIREMENTS OF TITLE 24, CALIFORNIA CODE OF REGULATIONS AND THE PROJECT SPECIFICATIONS PREPARED BY ME.
THE ITEMS LISTED BELOW ARE ACCEPTABLE FOR INCORPORATION INTO THE CONSTRUCTION OF THIS PROJECT FOR WHICH I AM THE INDIVIDUAL DESIGNATED TO BE IN GENERAL RESPONSIBLE CHARGE (OR FOR WHICH I HAVE BEEN DELIGATED RESPONSIBILITY FOR THIS PORTION OF THE WORK)
A LIST OF ITEMS HAVE BE REVIEWED AND ACCEPTED. (FOR DRAWINGS, A LIST OF ALL ACCEPTED DRAWINGS ARE ATTACHED, SEE SHEET NO._____).

LICENSED ARCHITECT STEPHEN J. GEIGER No. C-16788 REN. 11/30/01 STATE OF CALIFORNIA

Stephen J. Geiger, NCARB, AIA — DATE 8/6/97

LICENSE # C-16788

EXP. DATE 11/30/01

HEAT PUMP: SINGLE PACKAGE, WALL MOUNTED, AIR TO AIR, ELECTRIC HEAT PUMP UNIT SHALL BE RATED IN ACCORDANCE WITH ARI STANDARDS 240-77 AND HAVE CURRENT UL LISTING.
REFERENCE STANDARDS: (DPSC AND CALIF ENERGY APPROVED)
SUN HW42H-1-C0S-C (OR EQUAL).
RHEM WH42-A00008 (OR EQUAL)
INTERTHERM PWH8-042KB10 (OR EQUAL)
WIRING AND MOUNTING INSTALLATION OF UNIT TO BE IN ACCORDANCE WITH MANUFACTURER'S INSTALLATIONS.
FEATURES: TWO SPEED INDOOR BLOWER MOTOR TO REDUCE INDOOR NOISE LEVEL.
RECEIVE 8.5 KW HEAT STRIP (HEATER CAN BE SERVICED BY 60 AMP BREAKER, COMPRESSOR BY 50 AMP BREAKER).
MAX. TOTAL AMPS, 68 AT MINIMUM 240 VOLTS.
MIN. CIRCUIT AMPS, HEATER 50 AMPS, COMPRESSOR 55.3 AMPS
LOW TEMPERATURE OUTDOOR THERMOSTAT TO ASSIST CIRCULATING DURING THE HEATING MODE.
COOLING 59406 BTUH (95°F), HEATING 49000 BTUH (47°F)
WEIGHT: MAXIMUM 595 POUNDS.
208/230V 1 PHASE

1 MI

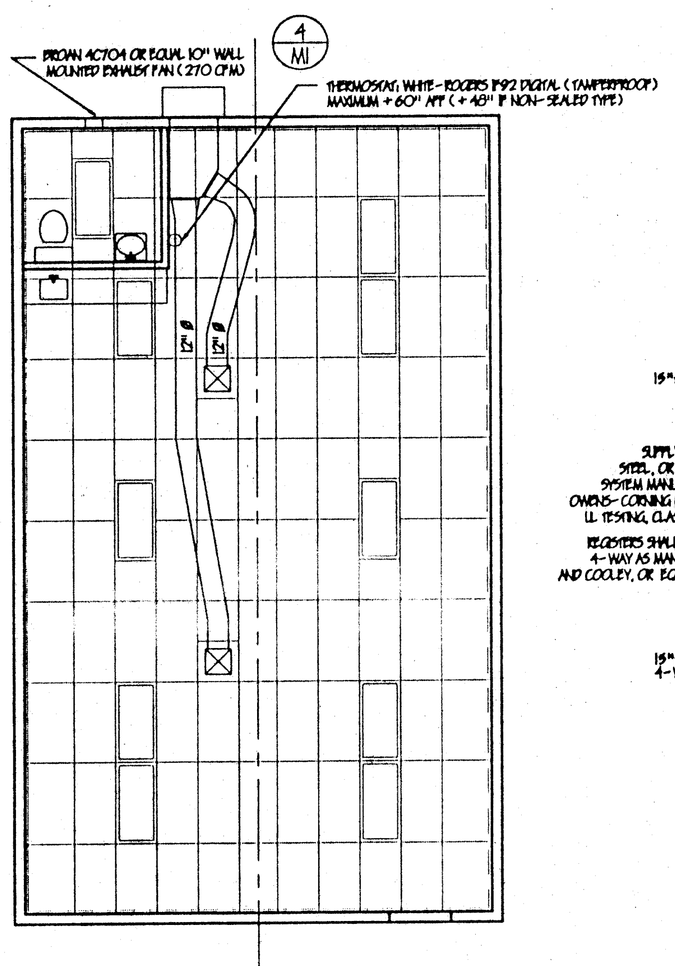

24'x40' ALT. MECHANICAL (HVAC) PLAN

SCALE: 3/16"=1'-0"

(REVERSE PLAN SIMILAR)

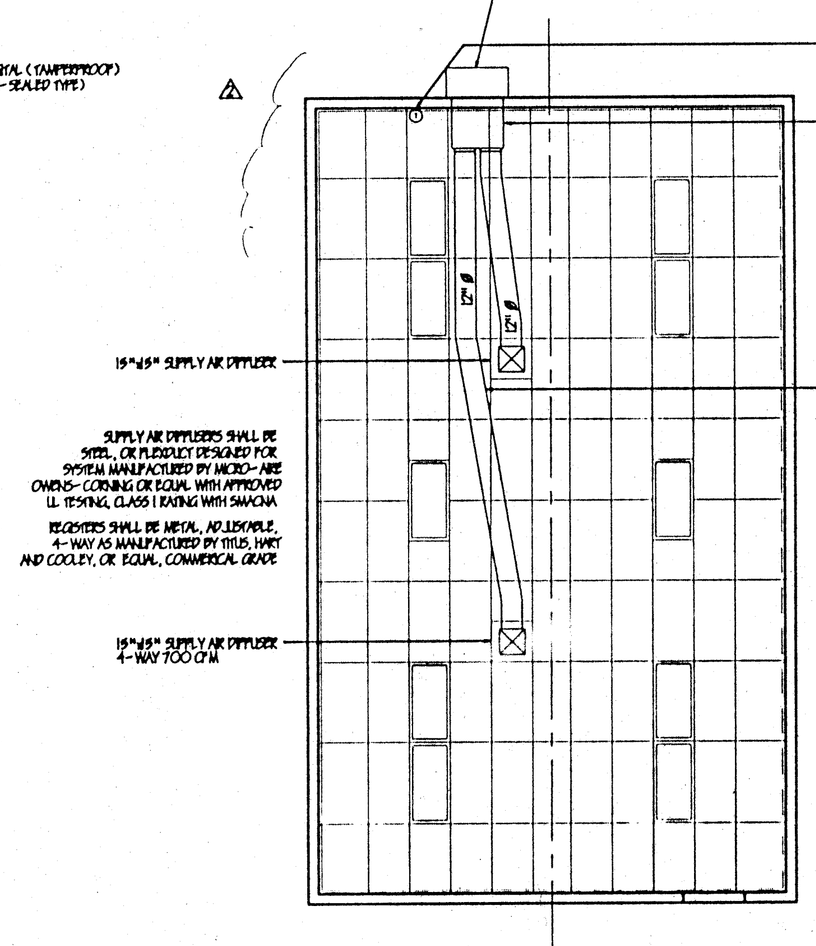

SUPPLY AIR DIFFUSERS SHALL BE STEEL, OR PLASTIC DESIGNED FOR SYSTEM MANUFACTURED BY MICRO-AIRE OWENS-CORNING OR EQUAL WITH APPROVED U.L. TESTING, CLASS 1 RATING WITH SAMONA

REGISTERS SHALL BE METAL, ADJUSTABLE, 4-WAY AS MANUFACTURED BY TITUS, HART AND COOLEY, OR EQUAL, COMMERCIAL GRADE

AIR FILTERS: SHALL BE AN APPROVED TYPE TESTED IN ACCORDANCE WITH TEST METHODS ASHRAE-52-76, AS INDICATED IN PART 12, TITLE 24, CALIFORNIA CODE OF REGULATIONS. PREFORMED FILTERS HAVING COMPLETELY FRAMING SHALL BE TESTED AS A COMPLETE ASSEMBLY. AIR FILTERS IN ALL OCCUPANCIES SHALL BE CLASS 2 OR BETTER, AS DEFINED IN THE TEST METHOD ABOVE. AIR FILTERS SHALL BE ACCESSIBLE FOR CLEANING OR REPLACEMENT.

DUCTS: MAY BE CLASS "1" OR "0". FACTORY MADE AIR DUCTS SHALL BE APPROVED FOR THE USE INTENDED OR SHALL CONFORM TO THE REQUIREMENTS OF UMC STANDARD NO. 6-1. EACH PORTION OF A FACTORY MADE AIR DUCT SYSTEM SHALL BE IDENTIFIED BY THE MANUFACTURER WITH A LABEL OR OTHER SUITABLE IDENTIFICATION INDICATING COMPLIANCE WITH UMC STANDARD NO. 6-1 AND ITS CLASS DESIGNATION. THESE DUCTS SHALL BE INSTALLED IN ACCORDANCE WITH THE CONDITIONS OF THEIR LISTING. INSULATION APPLIED TO THE EXTERIOR SURFACE OF DUCTS LOCATED IN BUILDING SHALL HAVE A FLAME SPREAD RATING OF NOT MORE THAN 25 AND A SMOKE DEVELOPED RATING OF NOT MORE THAN 50, WHEN TESTED AS A COMPOSITE INSULATION, INCLUDING INSULATION, FACING MATERIALS, TAPES AND ADHESIVE, AS NORMALLY APPLIED. MATERIAL EXPOSED WITHIN DUCTS OR PLENUMS SHALL HAVE A FLAME SPREAD RATING OF NOT MORE THAN 25 AND A SMOKE DEVELOPED RATING OF NOT MORE THAN 50.

DUCT SUPPORT:
FLEX DUCT TO BE SUPPORTED WITH 1-1/2" WIDE x 26 GAUZE GALVANIZED STRAPS AT MAXIMUM 6'-0" ON CENTER. ATTACH TO ROOF JOISTS WITH 2 #8 SMS AT EACH END.
SUPPLY AIR PLENUM TO BE SUPPORTED WITH 1-1/2" WIDE x 26 GAUZE GALVANIZED STRAPS, MINIMUM 2 PER PLENUM.
SUPPLY AIR BOX AND DIFFUSERS TO BE SUPPORTED WITH 2 12 GAUZE HANGER WIRES TO BOX AT OPPOSITE CORNERS.
SUPPLY AIR BOX AND DIFFUSERS TO BE BRACED WITH 2 12 GAUZE SLACK WIRES TO BOX AT OPPOSITE CORNERS. ATTACH SUPPLY AIR DIFFUSERS TO CEILING GRID TO RESIST A LATERAL LOAD EQUAL TO THE WEIGHT OF THE DIFFUSER AND SUPPLY AIR BOX WITH 2 #8 SMS.

24'x40' MECHANICAL (HVAC) PLAN

SCALE: 3/16"=1'-0"

(REVERSE PLAN SIMILAR)

GENERAL NOTES

THE SEISMIC ANCHORAGE OF MECHANICAL EQUIPMENT SHALL CONFORM TO CCR TITLE 24. (SEE STRUCTURAL DRAWINGS)

ANCHORAGE DETAILS FOR ROOF / FLOOR MOUNTED EQUIPMENT LESS THAN 400 POUNDS AND HUNG EQUIPMENT LESS THAN 20 POUNDS MAY BE OMITTED FROM THE DRAWINGS.

ALL MECHANICAL EQUIPMENT SHALL BE BRACED OR ANCHORED TO RESIST A HORIZONTAL FORCE ACTING IN ANY DIRECTION USING THE FOLLOWING EQUIP. ON GROUND: 20% OF OPERATING WEIGHT EQUIP. ON STRUCTURE: 50% OF OPERATING WEIGHT FOR FLEXIBLY MOUNTED EQUIPMENT USE 4 TIMES THE ABOVE VALUES, FOR SIMULTANEOUS VERTICAL FORCE USE 1/3 TIMES THE HORIZONTAL FORCE. THE ABOVE VALUES ARE FOR AN IMPORTANCE FACTOR, I=1.0 AND SEISMIC ZONE, Z=4

WHERE ANCHORAGE DETAILS ARE NOT SHOWN, THE FIELD INSTALLATION SHALL BE SUBJECT TO THE APPROVAL OF THE ARCHITECT, AND THE FIELD ENGINEER OF DSA.

ALL FINISHES SHALL COMPLY WITH CBC CHAPTERS 3, 6, 7, 8, AND 10

DUCTWORK SHALL BE RIGIDLY ATTACHED TO BUILDING AND SHALL NOT BE CLOSER THAN 6" TO HANGER WIRES.

REGISTERS SHALL BE POSITIVELY ATTACHED WITH 4-10GA SHEET METAL SCREWS OR AS NOTED.

CEILING PANELS, 2'x4' LAY-IN PANELS, NON PLANE SPREAD CLASS I (0-25), PLANE SPREAD SMOKE DEVELOPMENT DENSITY LESS THAN 450.

SEE SHEET A1 FOR GENERAL SPECIFICATIONS AND VARIABLE SPECIFICATIONS

SEE SHEET S0.1 FOR STRUCTURAL NOTES
SEE DETAIL 3/S0.2 FOR STRUCTURAL FRAMING

ABBREVIATIONS:

AL OR ALUM.	ALUMINUM
NR	NOT RATED
NO.	NUMBER
MIN.	MINIMUM
MAX.	MAXIMUM
AFF	ABOVE FINISH FLOOR

LEGEND

- MAN-TUNNEL / CROSS RUNNER — T BAR CEILING
- INDICATED FIXED SIDE
- INDICATED FREE SIDE
- SPLAY WIRE - 4 WAY
- THERMOSTAT AT + 60" AFF (SEALED) AT + 48" AFF (NOT SEALED)
- 2'x4' RECESSED LIGHT FIXTURE
- SUPPLY AIR DIFFUSER (15"x15" SUPPLY AIR GRILLE 4-WAY, 700 CFM)

APPROVALS

IDENTIFICATION STAMP DIV. OF THE STATE ARCHITECT

APPD: _____ DATE: _____

IDENTIFICATION STAMP
REV. OF THE STATE ARCHITECT
OFFICE OF REGULATION SERVICES
PC 330
NO. 110 PLB JP BY KPK
DATE: 9-4-97

NORMAN A. GEIGER
AIA, CSI, CDT, ICBO
P.O. BOX 41054
Sacramento, CA 95841
(916) 332-2453 FAX
(916) 332-2453 PHONE

GRAFICS ARCHITECTURAL SERVICES
GEIGER

PACESETTER INDUSTRIES, INC.
P.O. BOX 1131, MODESTO, CA 95353 (209) 521-1600

24x40 RELOCATABLE BUILDING

SHEET CONTENTS:
MECHANICAL (HVAC) PLAN
HEAT/SUPPLY CROSS SECTION
GENERAL NOTES
CONTROL SCHEMATIC
DETAILS

DATE:		APRIL 28, 1997
REV. #1	△1	MAY 15, 1997
REV. #2	△2	JUNE 20, 1997
REV. #3	△3	AUGUST 1, 1997
REV. #4	△4	AUGUST 26, 1997
DRAWING SCALE:		AS SHOWN
PROJECT NUMBER:		97-05
SHEET		M1
OF		

COMPUTER SCALE: 3/16"=1'-0"