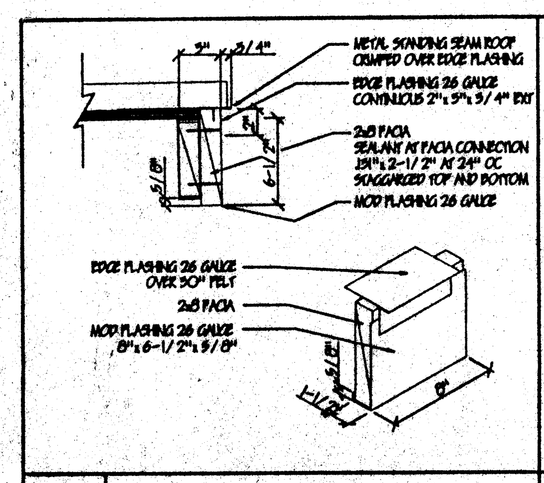

1 ROOF MOD TRIM SCALE: 1-1/2"=1'-0"

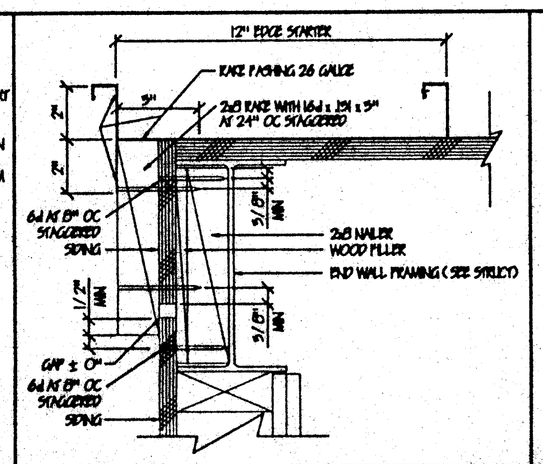

6 ROOF RAKE SCALE: 3"=1'-0"

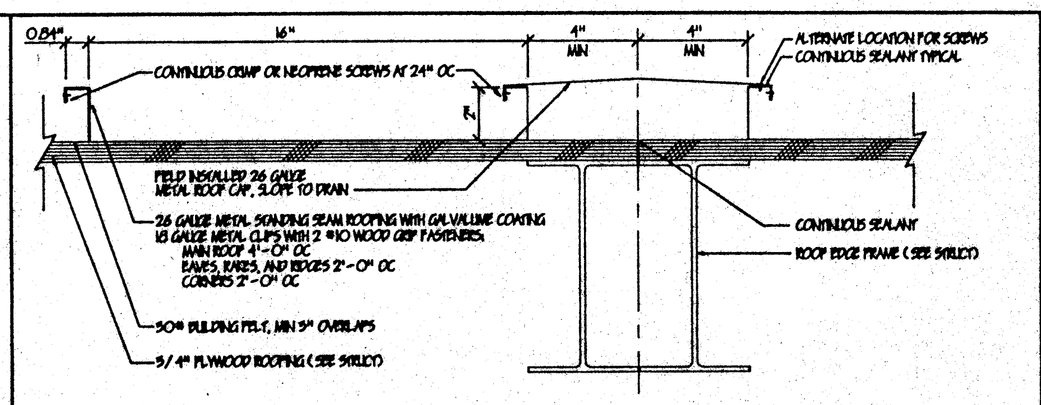

11 MODULE LINE ROOF CAP SCALE: 3"=1'-0"

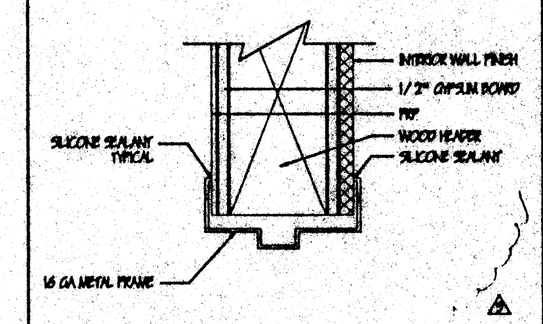

19 INT. DOOR HEAD SCALE: 3"=1'-0"

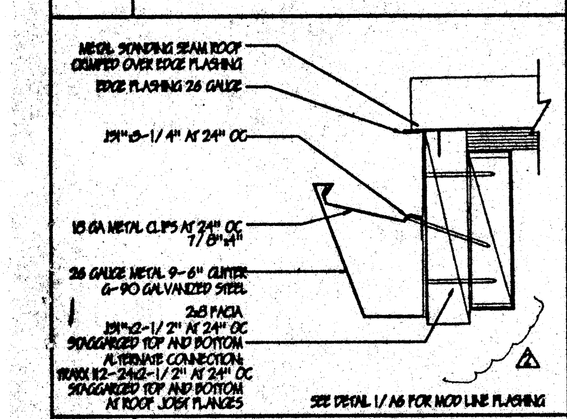

2 GUTTER SCALE: 3"=1'-0"

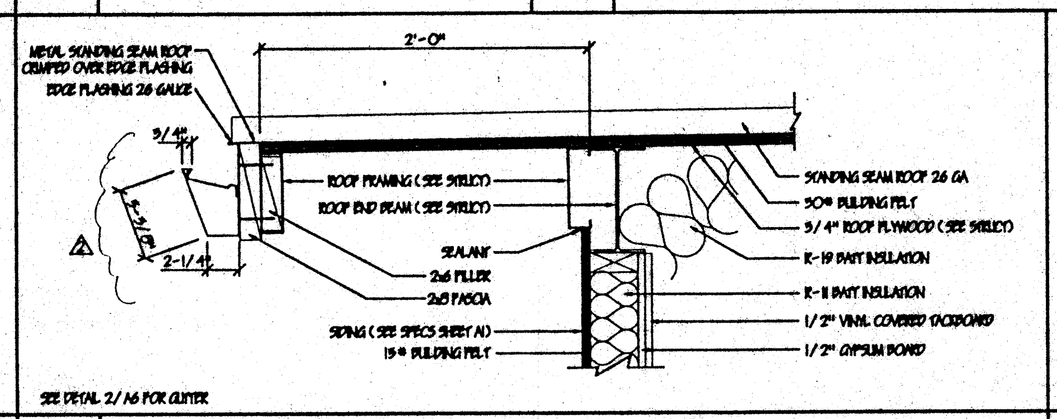

7 REAR OVHG SCALE: 1-1/2"=1'-0"

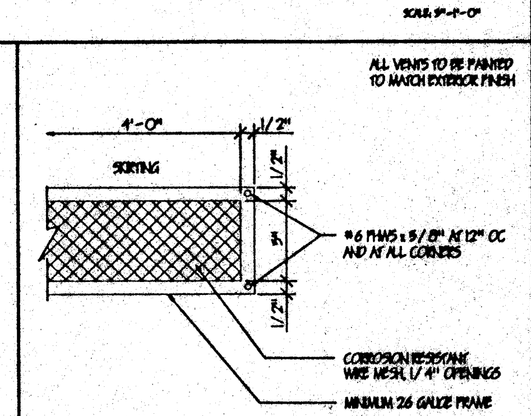

15 VENT SCALE: 3"=1'-0"

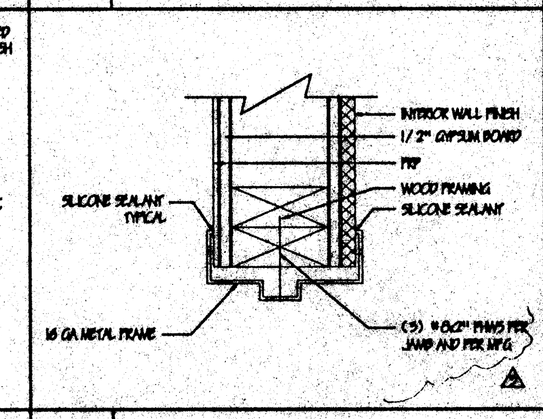

20 INT. DOOR JAMB SCALE: 3"=1'-0"

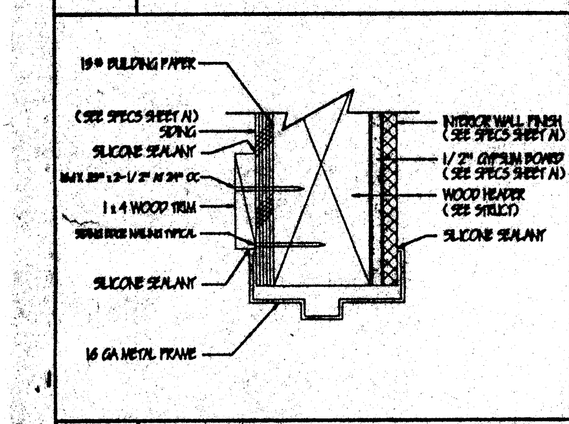

3 DOOR HEAD SCALE: 3"=1'-0"

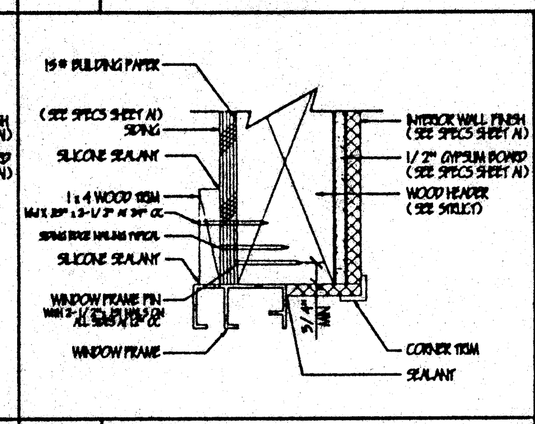

8 WINDOW HEAD SCALE: 3"=1'-0"

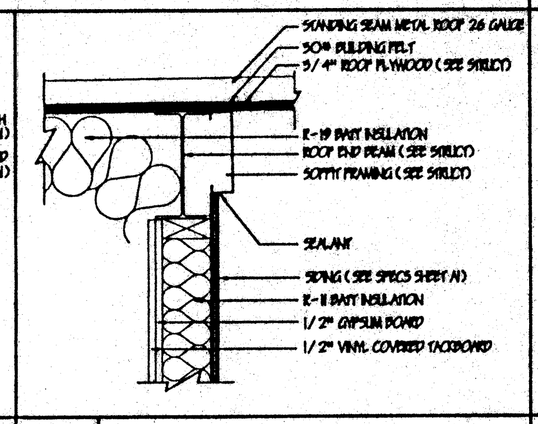

12 ENTRY OVHG SCALE: 1-1/2"=1'-0"

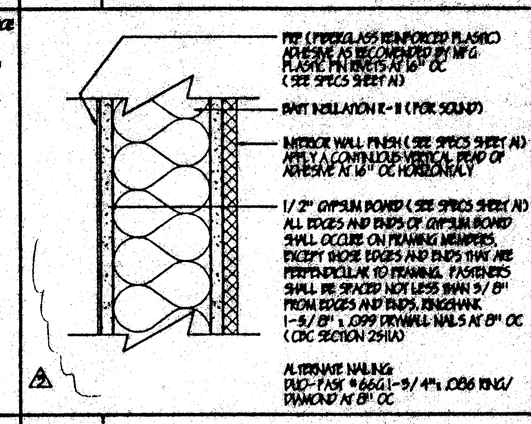

16 INT. WALL FINISH SCALE: 3"=1'-0"

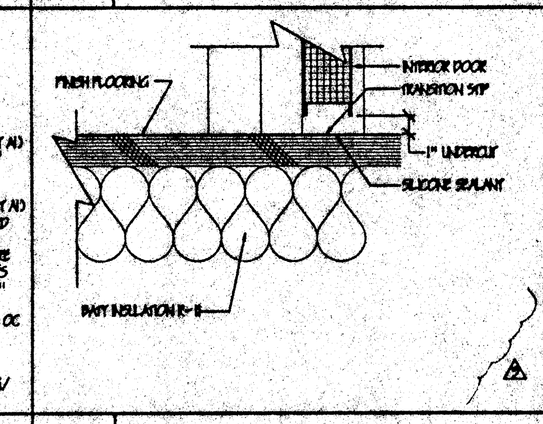

21 DOOR THRESHOLD SCALE: 3"=1'-0"

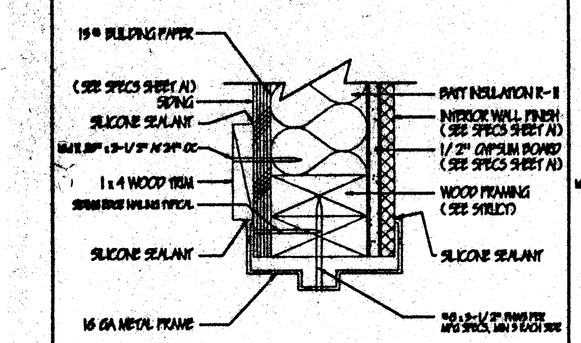

4 DOOR JAMB SCALE: 3"=1'-0"

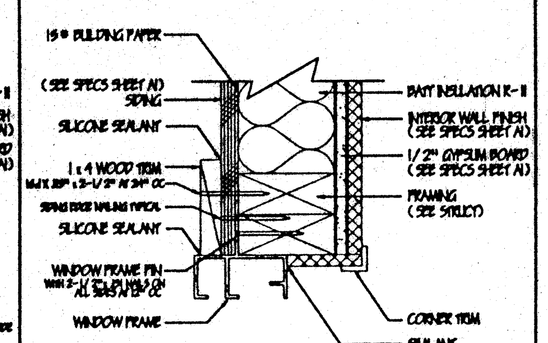

9 WINDOW JAMB SCALE: 3"=1'-0"

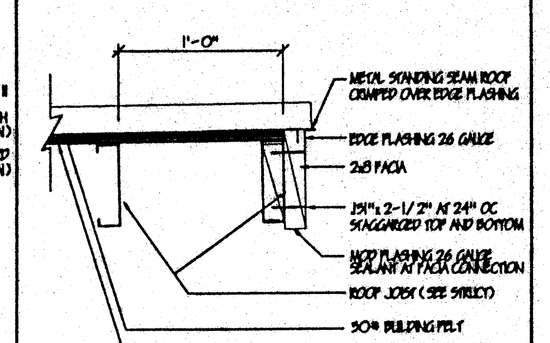

13 ENTRY OVHG SCALE: 1-1/2"=1'-0"

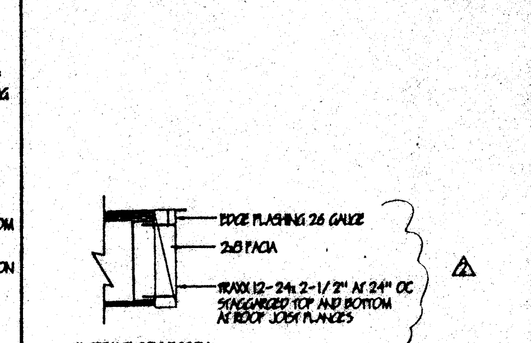

17 OVHG ALTERNATE SCALE: 1-1/2"=1'-0"

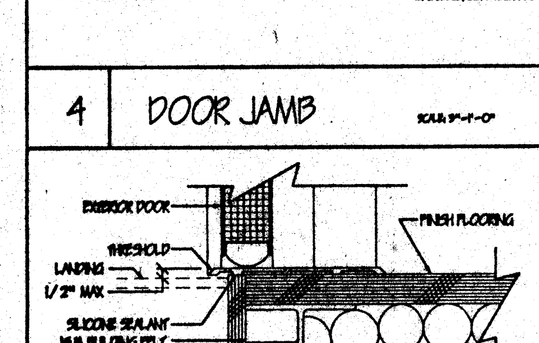

5 DOOR THRESHOLD SCALE: 3"=1'-0"

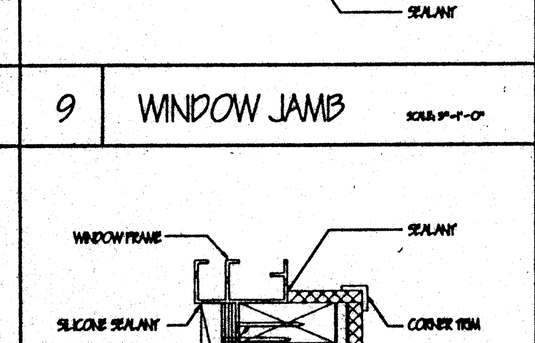

10 WINDOW SILL SCALE: 3"=1'-0"

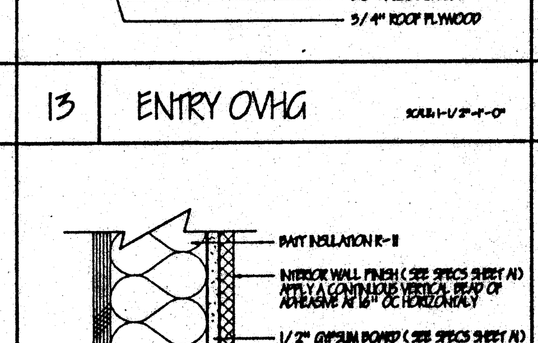

14 WALL FINISH SCALE: 3"=1'-0"

THESE DRAWINGS AND / OR SPECIFICATIONS AND / OR CALCULATIONS FOR THE ITEMS LISTED BELOW HAVE BEEN PREPARED BY OTHER DESIGN PROFESSIONALS WHO ARE LICENSED AND AUTHORIZED TO PREPARED SUCH DRAWINGS IN THIS STATE. THESE DOCUMENTS HAVE BEEN EXAMINED BY ME AND HAVE BEEN FOUND TO MEET THE APPROPRIATE REQUIREMENTS OF TITLE 24, CALIFORNIA CODE OF REGULATIONS AND THE PROJECT SPECIFICATIONS PREPARED BY ME.
THE ITEMS LISTED BELOW ARE ACCEPTABLE FOR INCORPORATION INTO THE CONSTRUCTION OF THIS PROJECT FOR WHICH I AM THE INDIVIDUAL DESIGNATED TO BE IN GENERAL RESPONSIBLE CHARGE (OR FOR WHICH I HAVE BEEN DELEGATED RESPONSIBILITY FOR THIS PORTION OF THE WORK).
LIST ITEMS REVIEWED AND ACCEPTED. (FOR DRAWINGS, ALIST OF ALL ACCEPTED DRAWINGS ARE TO BE ATTACHED).

LICENSED ARCHITECT REGISTERED PROFESSIONAL No. C-16786 REN. 11/30/01 STATE OF CALIFORNIA

[illegible], REAS, AIA DATE 08/22/00

LICENSE # C-16786

EXP. DATE 11/30/01

GENERAL NOTES

ALL FINISHES SHALL COMPLY WITH CBC CHAPTERS 5, 6, 7, 8, AND 10

ABBREVIATIONS:

AFF	ABOVE FINISH FLOOR
AL OR ALUM	ALUMINUM
FNSH	FOUNDATION
GA	GAUGE
HM	HOLLOW METAL
INT	INTERIOR
MAX	MAXIMUM
MFG	MANUFACTURER
MIN	MINIMUM
NO.	NUMBER
NR	NOT REQUIRED
OVHG	OVERHANG
PT	PAINT
STRUCT	STRUCTURAL

LEGEND

BATT INSULATION
WOOD MEMBER
BLOCKING
GYPSUM BOARD
PLYWOOD

APPROVALS

IDENTIFICATION STAMP
DIV. OF THE STATE ARCHITECT
APPD: [illegible]
FEB 2 1998

IDENTIFICATION STAMP
DIV. OF THE STATE ARCHITECT
OFFICE OF REGULATION SERVICES
PC 330
NO. [illegible]
DATE [illegible]

NORMAN A. GEIGER
AIA, CSI, CDT, ICBO
P.O. BOX 41054
Sacramento, CA 95841
(916) 332-2453 FAX
(916) 332-2453 PHONE

GEIGER GRAFICS ARCHITECTURAL SERVICES

LICENSED ARCHITECT NORMAN A. GEIGER No. 4947 STATE OF CALIFORNIA

PACESETTER INDUSTRIES, INC.
P.O. BOX 1151, MODESTO, CA 95353 (209) 521-1600

24x40 RELOCATABLE BUILDING

SHEET CONTENTS:
GENERAL NOTES
DETAILS

DATE:		APR. 28, 1997
REV. #1	1	MAY 19, 1997
REV. #2	2	JUNE 20, 1997
REV. #3	3	AUGUST 1, 1997
REV. #4	4	AUGUST 26, 1997
DRAWING SCALE:		AS SHOWN
PROJECT NUMBER:		97-05

SHEET A6 OF

COMPUTER SCALE: 3/16"=1'-0"