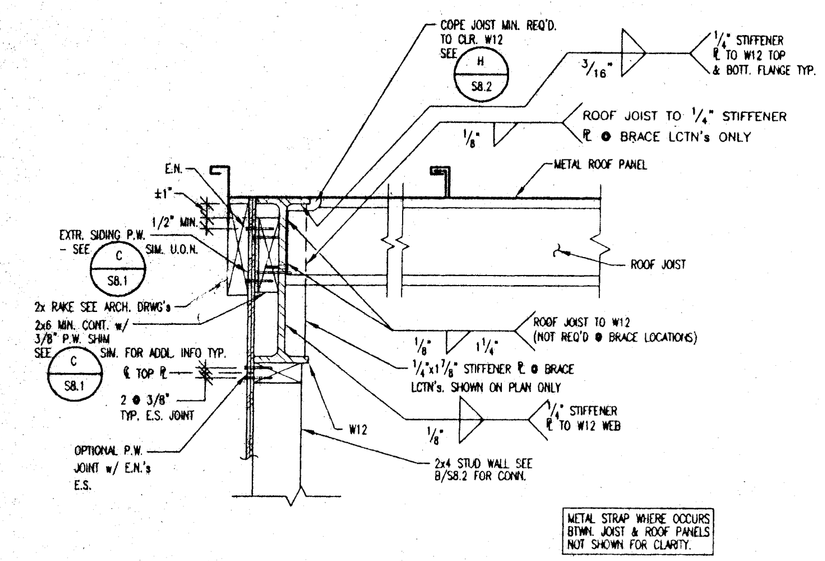

A S8.4 ROOF DETAIL - TYP. @ SIDEWALL

SCALE: 1 1/2"=1'-0"

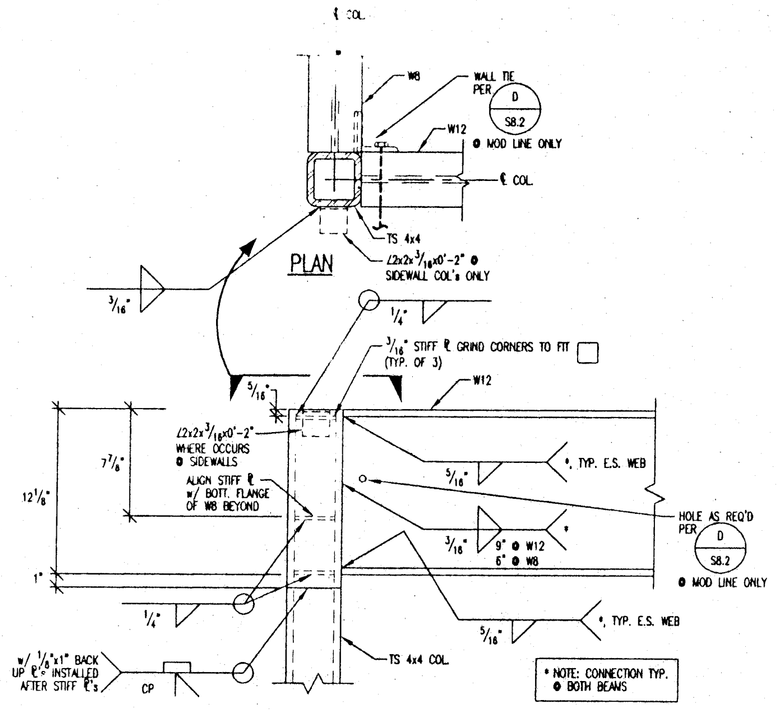

B S8.4 TYP. - ROOF BEAMS @ TS COL. CONN.

SCALE: 1 1/2"=1'-0"

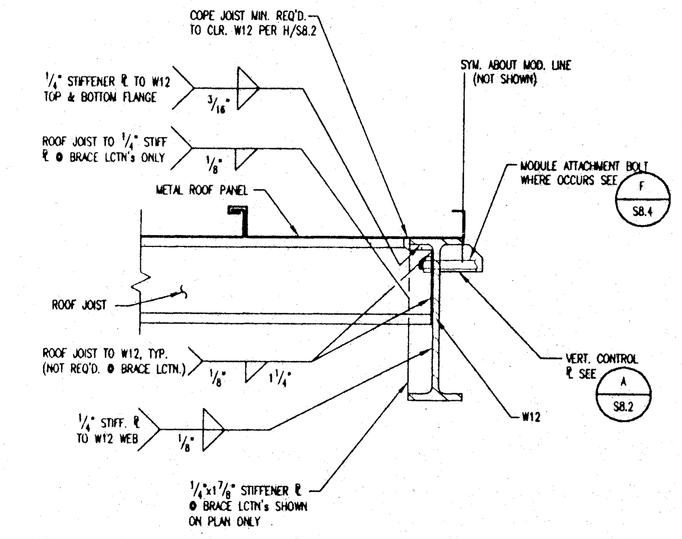

C S8.4 ROOF DETAIL - TYP. @ MODULE LINE

SCALE: 1 1/2"=1'-0"

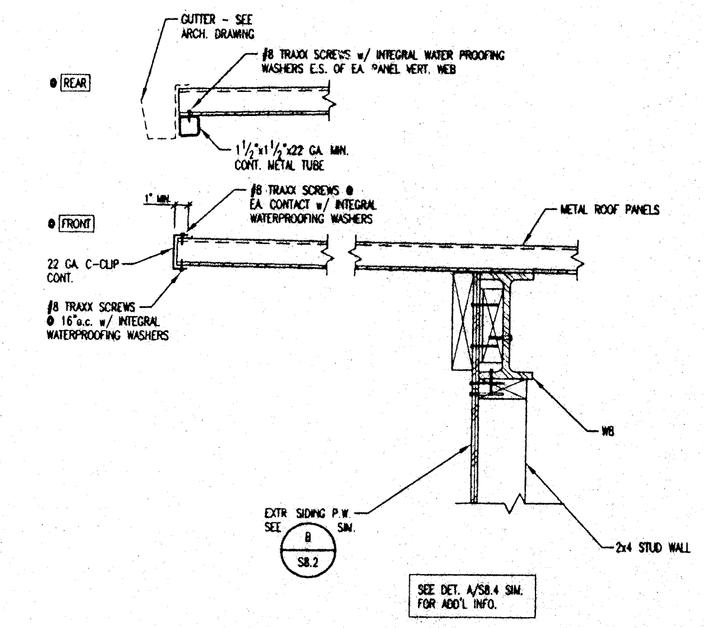

D S8.4 ROOF DETAIL - TYP. @ ENDWALLS

SCALE: 1 1/2"=1'-0"

THESE DRAWINGS AND / OR SPECIFICATIONS AND / OR CALCULATIONS FOR THE ITEMS LISTED BELOW HAVE BEEN PREPARED BY OTHER DESIGN PROFESSIONALS WHO ARE LICENSED AND AUTHORIZED TO PREPARED SUCH DRAWINGS IN THIS STATE. THESE DOCUMENTS HAVE BEEN EXAMINED BY ME AND HAVE BEEN FOUND TO MEET THE APPROPRIATE REQUIREMENTS OF TITLE 24, CALIFORNIA CODE OF REGULATIONS AND THE PROJECT SPECIFICATIONS PREPARED BY ME.
THE ITEMS LISTED BELOW ARE ACCEPTABLE FOR INCORPORATION INTO THE CONSTRUCTION OF THIS PROJECT FOR WHICH I AM THE INDIVIDUAL DESIGNATED TO BE IN GENERAL RESPONSIBLE CHARGE (OR FOR WHICH I HAVE BEEN DELEGATED RESPONSIBILITY FOR THIS PORTION OF THE WORK).
LIST ITEMS REVIEWED AND ACCPTED. (FOR DRAWINGS, A LIST OF ALL ACCEPTED DRAWINGS ARE TO BE ATTACHED).

LICENSED ARCHITECT STEPHEN J. CORBETT No. C-16788 (EXP. 11/30/01) STATE OF CALIFORNIA

Stephen J. Corbett, AIA DATE 05/31/00

LICENSE # C-16788

EXP. DATE 11/30/01

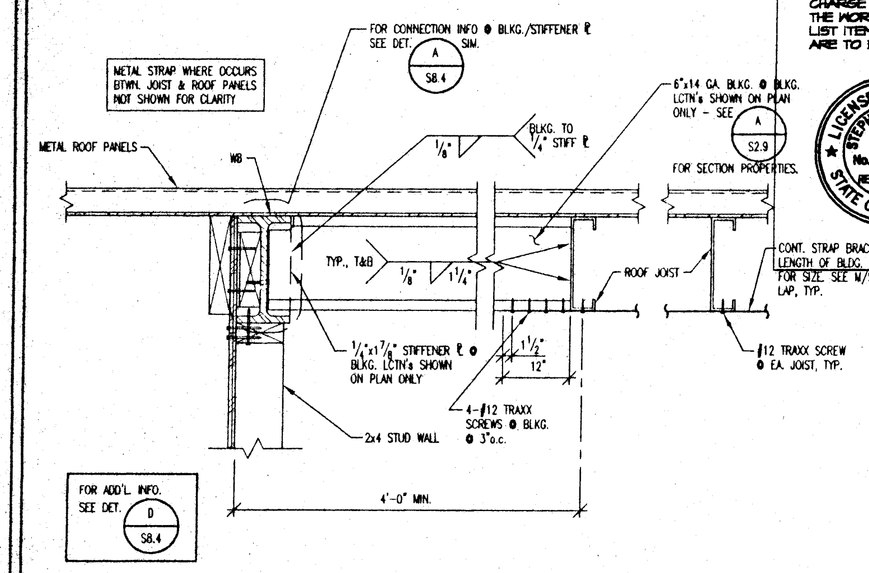

E S8.4 ROOF DETAIL-BLKG. @ ENDWALL BEAM

SCALE: 1 1/2"=1'-0" (TYP. @ FRONT & REAR)

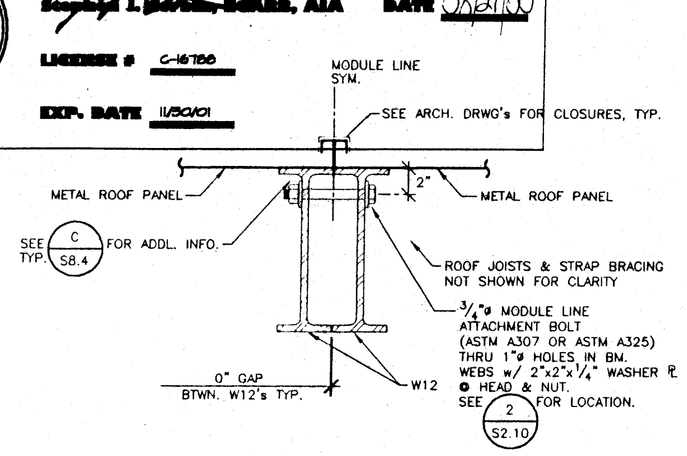

F S8.4 ROOF DETAIL - MODULE LINE ATTACHMENT BOLT

SCALE: 1 1/2"=1'-0"

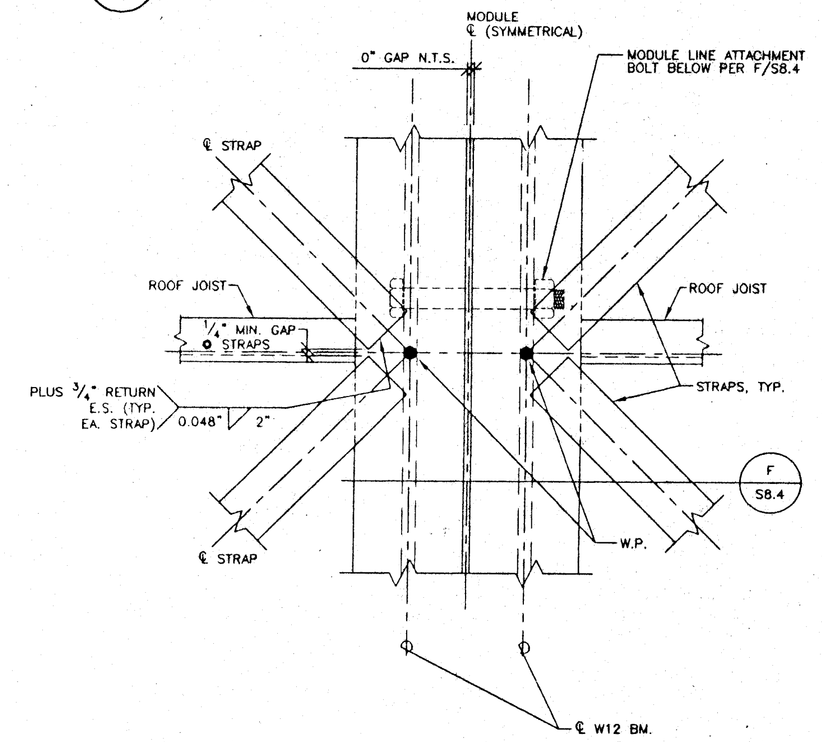

G S8.4 PLAN - STRAP CONN. @ MODULE LINE (SIDEWALL SIM.)

SCALE: 3"=1'-0"

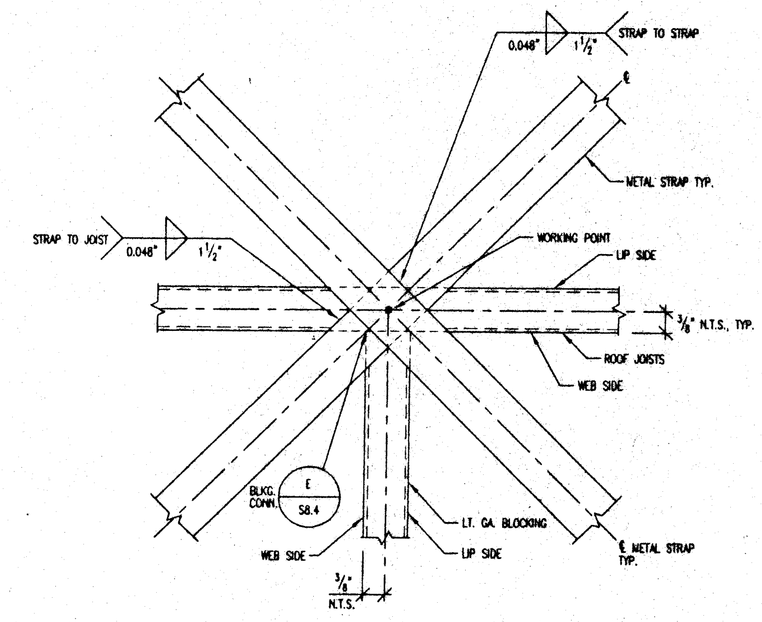

H S8.4 PLAN - STRAP CONN. @ BLKG.

SCALE: 3"=1'-0"

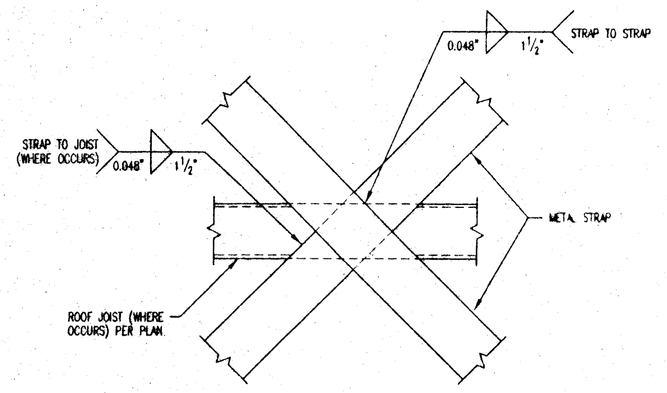

J S8.4 PLAN - STRAP INTERSECTION

SCALE: 3"=1'-0"

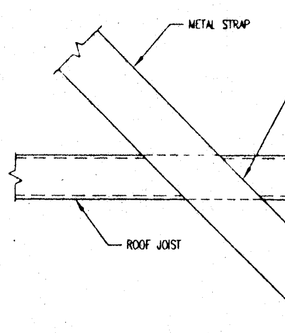

K S8.4 PLAN - STRAP JOIST INTERSECTION TYP. DETAIL

SCALE: 3"=1'-0"

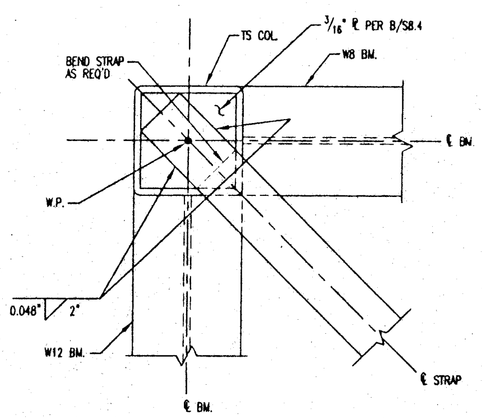

L S8.4 PLAN - STRAP CONN. @ CORNER COL.

SCALE: 3"=1'-0"

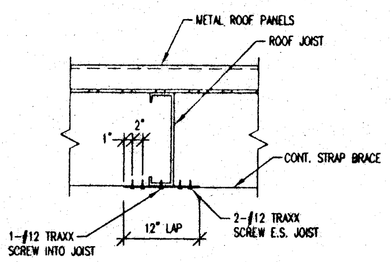

M S8.4 LAP SPLICE @ STRAP BRACING

SCALE: 1 1/2"=1'-0"

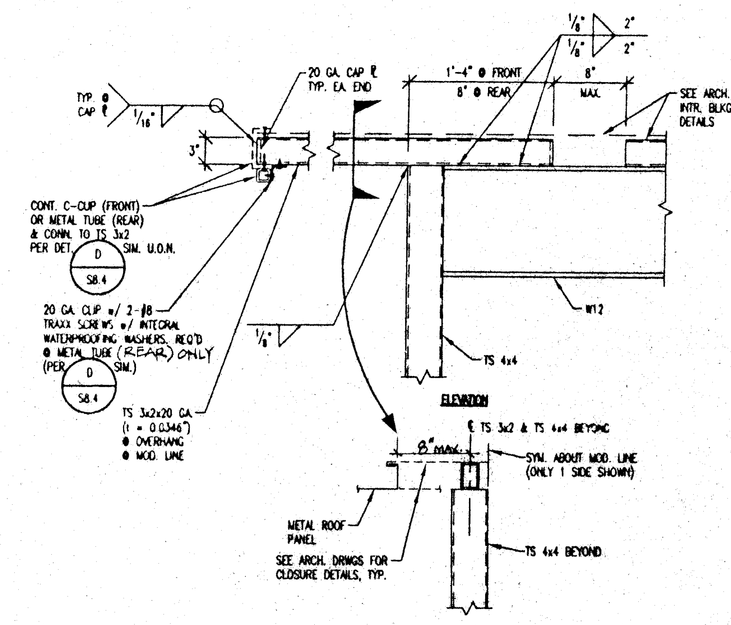

N S8.4 TYP. TS 3x2 OVERHANG BM. @ MODULE LINE CLOSURE

SCALE: 1"=1'-0" (AS REQ'D - SEE ARCH. DRWGS FOR LCTN'S, TYP.)

IDENTIFICATION STAMP
DIV. OF THE STATE ARCHITECT
APPROVED
AC TLS SS
DATE FEB 2 6 2001

IDENTIFICATION STAMP
DIV. OF THE STATE ARCHITECT
OFFICE OF REGULATION SERVICES
PC-374
AC: PLS: SS:
DATE: 10-24-97

36'x40' BLDG. AND 48'x40' BLDG.

DESIGN (1985 CBC)				
ROOF LIVE LOAD	=	20	PSF	(SNOW)
FLOOR LIVE LOAD	=	50 (100 AT)	PSF	
WIND	=	75	MPH	EXP C
SEISMIC ZONE	=	4		

REVISIONS	BY

PACESETTER INDUSTRIES, INC.

P.O. BOX 1131, MODESTO, CA 95353 (209) 521-1600

36x40 ~~& 48x40~~ RELOCATABLE BUILDINGS

ROOF DETAILS FOR METAL ROOF PANEL - ALTERNATE

REGISTERED PROFESSIONAL ENGINEER BRUCE D. DOIG No. 2622 STRUCTURAL STATE OF CALIFORNIA

EXPIRES 3-31-00

ANDERSON & DOIG STRUCTURAL ENGINEERS
A CALIFORNIA CORPORATION
10508 PLACER LANE, STE. 100, SACRAMENTO, CA 95827-2571
(916) 364-9622 FAX (916) 364-9623

DRAWN	MM
CHECKED	BD/JEM
DATE	10-20-97
SCALE	AS NOTED
JOB NO.	97055 4840
SHEET	S8.4

OF SHEETS

D:\PROJECTS\PROJ_97\97055_4840\S8_4.dwg Mon Oct 20 11:45:08 1997