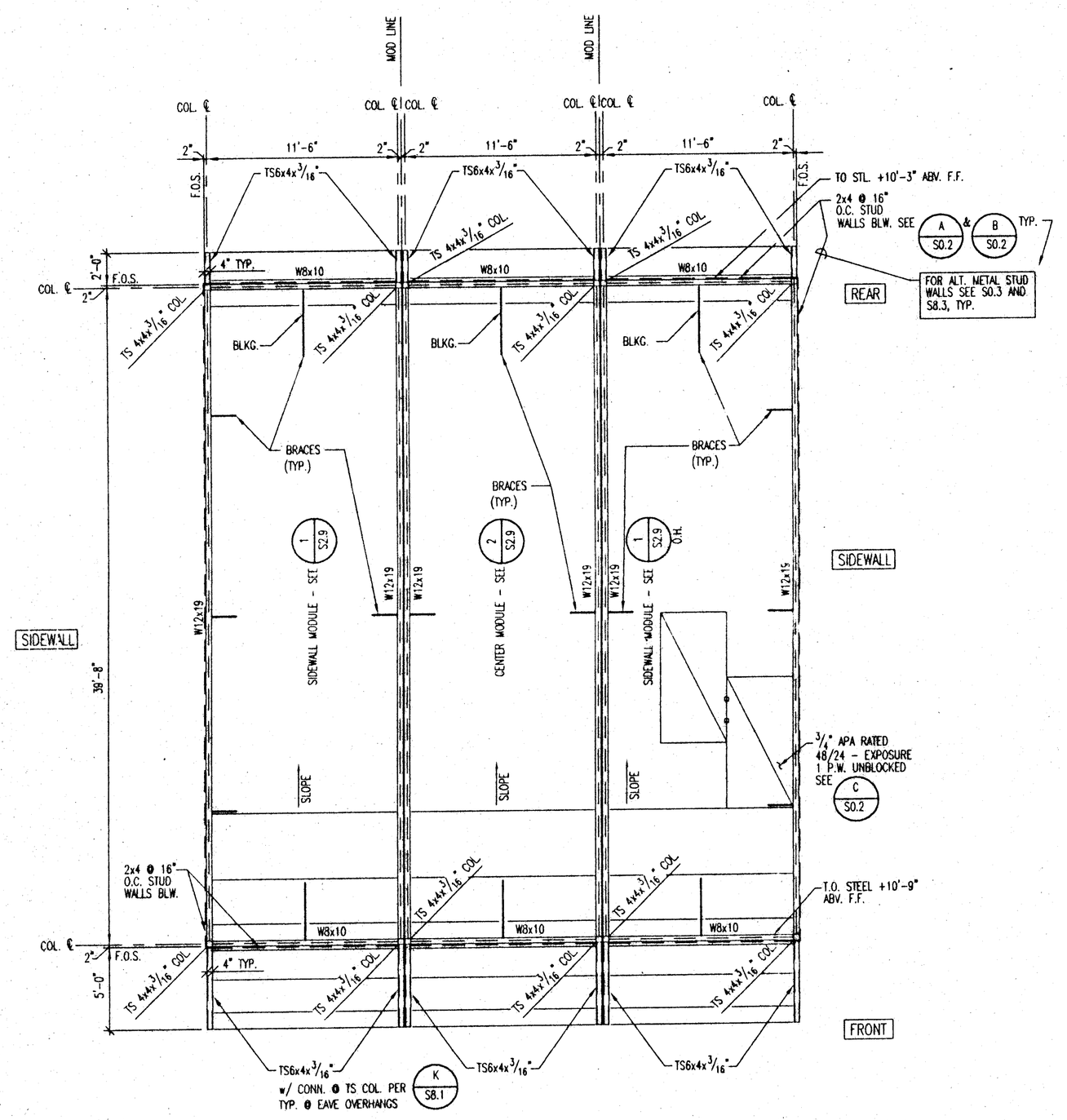

1 S2.7 ROOF PLAN - 36'x40' BUILDING
SCALE: 3/16"=1'-0"

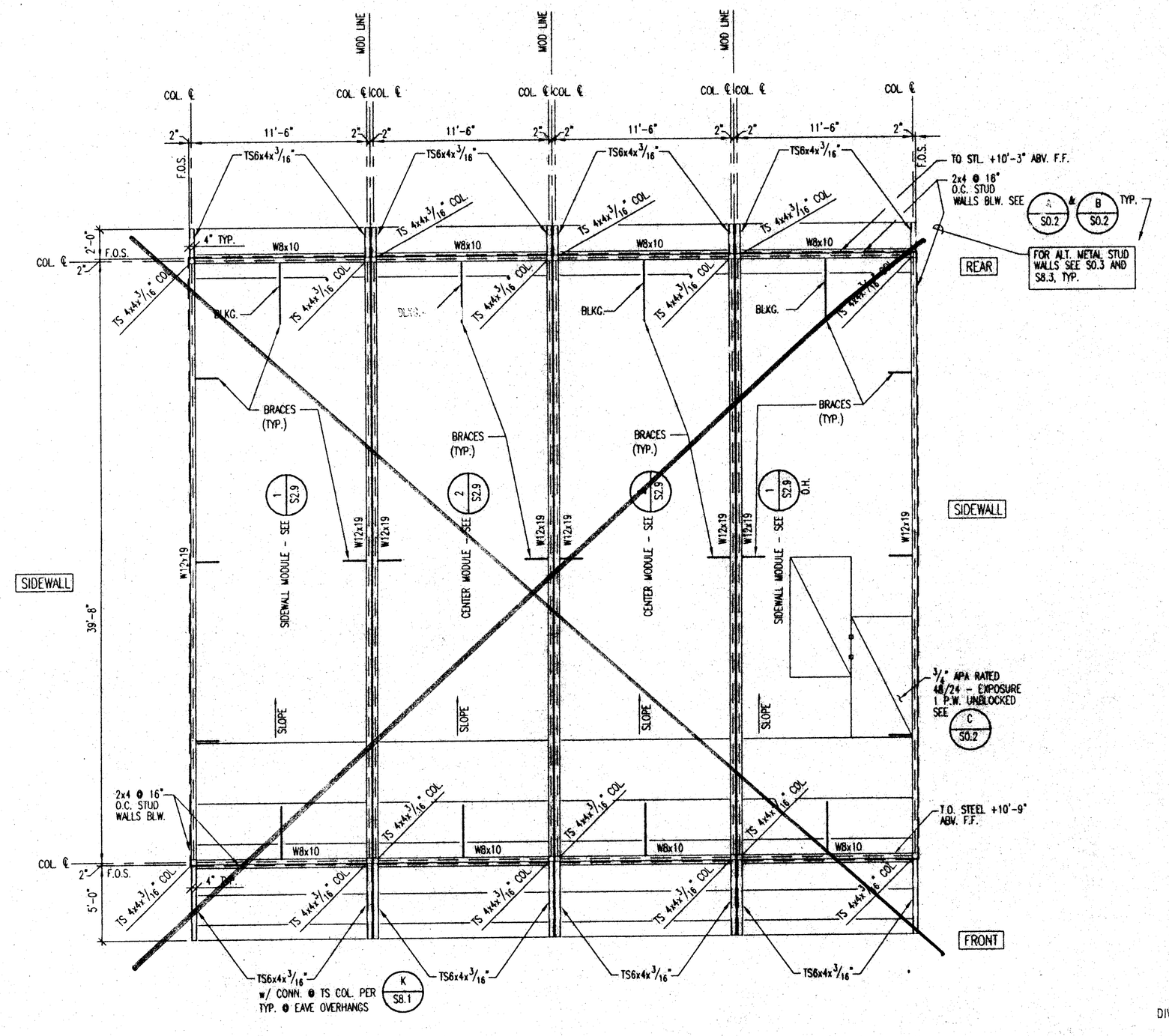

~~2 S2.7 ROOF PLAN - 48'x40' BUILDING~~
~~SCALE: 3/16"=1'-0"~~

THESE DRAWINGS AND / OR SPECIFICATIONS AND / OR CALCULATIONS FOR THE ITEMS LISTED BELOW HAVE BEEN PREPARED BY OTHER DESIGN PROFESSIONALS WHO ARE LICENSED AND AUTHORIZED TO PREPARED SUCH DRAWINGS IN THIS STATE. THESE DOCUMENTS HAVE BEEN EXAMINED BY ME AND HAVE BEEN FOUND TO MEET THE APPROPRIATE REQUIREMENTS OF TITLE 24, CALIFORNIA CODE OF REGULATIONS AND THE PROJECT SPECIFICATIONS PREPARED BY ME.
THE ITEMS LISTED BELOW ARE ACCEPTABLE FOR INCORPORATION INTO THE CONSTRUCTION OF THIS PROJECT FOR WHICH I AM THE INDIVIDUAL DESIGNATED TO BE IN GENERAL RESPONSIBLE CHARGE (OR FOR WHICH I HAVE BEEN DELEGATED RESPONSIBILITY FOR THIS PORTION OF THE WORK).
LIST ITEMS REVIEWED AND ACCEPTED. (FOR DRAWINGS, A LIST OF ALL ACCEPTED DRAWINGS ARE TO BE ATTACHED).

LICENSED ARCHITECT STEPHEN J. COGAN No. C-16786 EXP. 11/30/00 STATE OF CALIFORNIA

DATE 05/21/00

LICENSE # C-16786

EXP. DATE 11/30/01

IDENTIFICATION STAMP
DIV. OF THE STATE ARCHITECT
APPROVED
AC ___ FLS ___ SS
DATE FEB 22 2001

IDENTIFICATION STAMP
DIV. OF THE STATE ARCHITECT
OFFICE OF REGULATION SERVICES
PC-374
AC: ___ FLS: ___ SS: SPC
DATE: 10-24-97

36'x40' BLDG. AND 48'x40' BLDG.

DESIGN (1996 CBC)			
ROOF LIVE LOAD	=	20	PSF (SNOW)
FLOOR LIVE LOAD	=	50 (100 AT)	PSF
WIND	=	75	MPH EXP C
SEISMIC ZONE	=	4	

REVISIONS	BY

PACESETTER INDUSTRIES, INC.
P.O. BOX 1131, MODESTO, CA 95353 (209) 521-1600
36x40 ~~& 48x40~~ RELOCATABLE BUILDINGS

ROOF PLANS

REGISTERED PROFESSIONAL ENGINEER BRUCE D. DOIG No. 2523 STRUCTURAL STATE OF CALIFORNIA
EXPIRES 3-31-00

ANDERSON & DOIG STRUCTURAL ENGINEERS
A CALIFORNIA CORPORATION
10338 PLACER LANE, STE. 100, SACRAMENTO, CA 95827-2511
(916) 366-9622 FAX (916) 366-9623

DRAWN	KE
CHECKED	BD
DATE	10-3-97
SCALE	AS NOTED
JOB NO.	97055 4840
SHEET	S2.7
OF	SHEETS