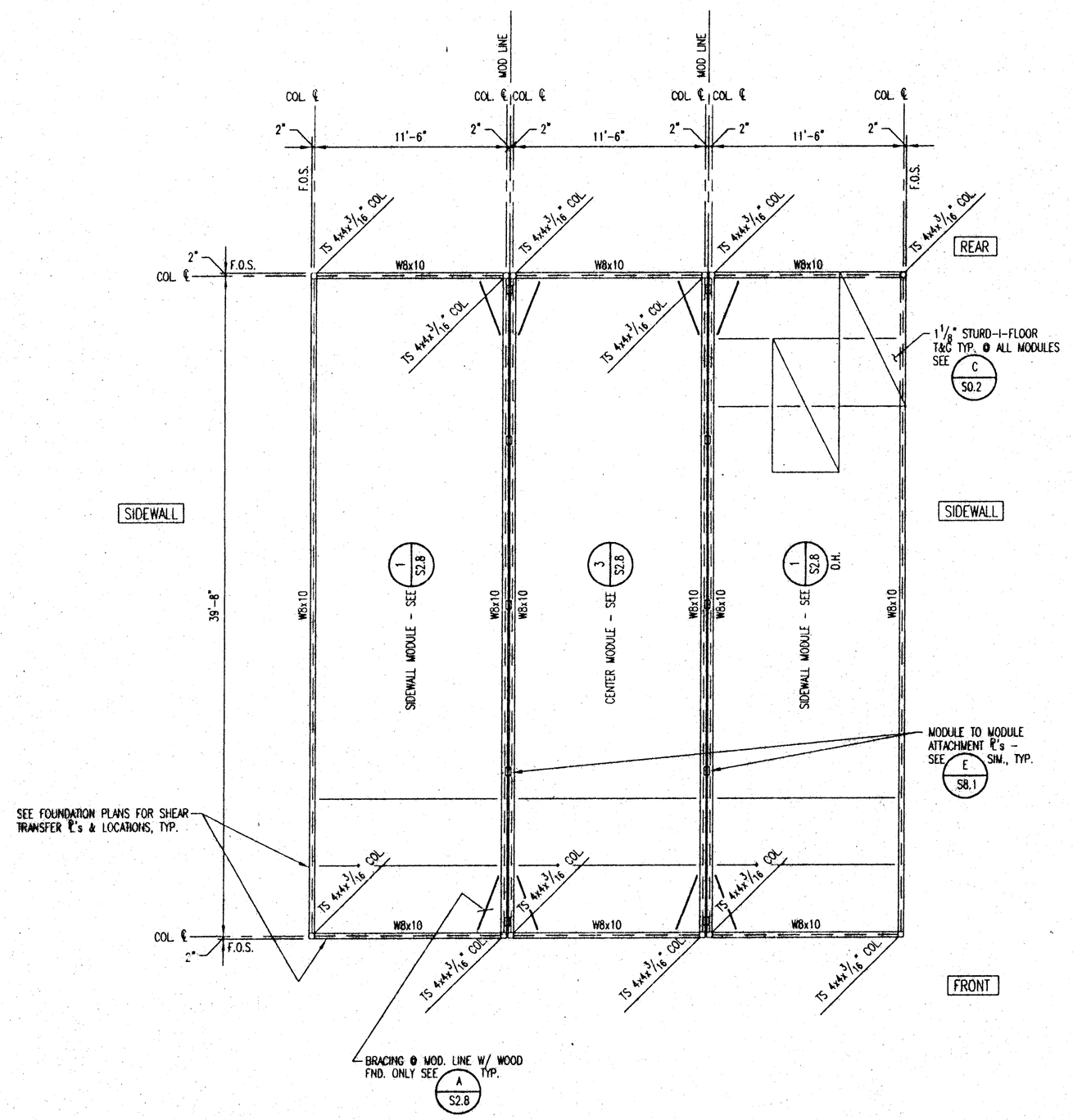

1 / S2.5 FLOOR PLAN - 36'x40' BUILDING (50 PSF FLOOR LIVE LOAD)
SCALE: 3/16"=1'-0"

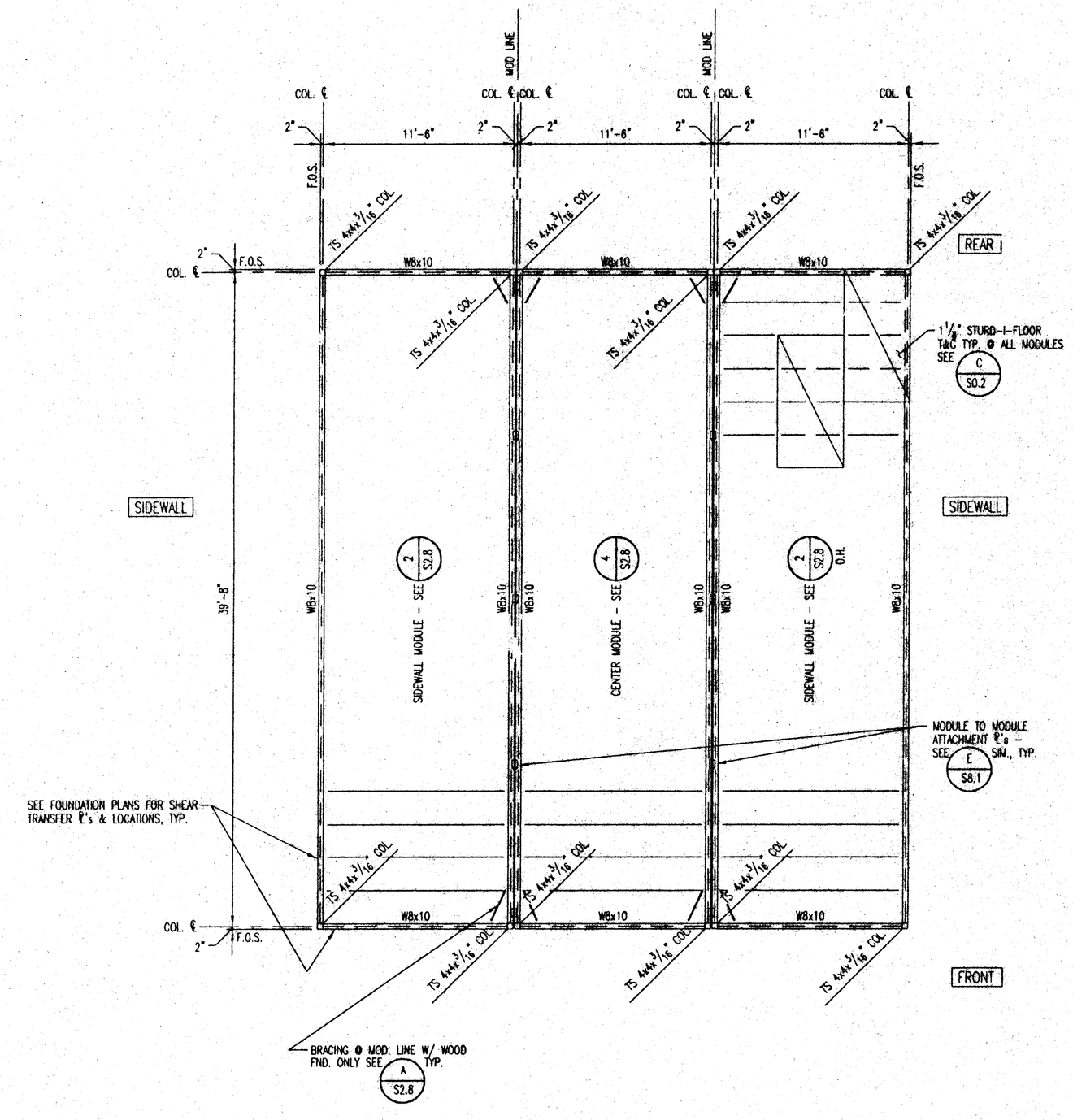

2 / S2.5 FLOOR PLAN - 36'x40' BUILDING (100 PSF FLOOR LIVE LOAD)
SCALE: 3/16"=1'-0"

THESE DRAWINGS AND / OR SPECIFICATIONS AND / OR CALCULATIONS FOR THE ITEMS LISTED BELOW HAVE BEEN PREPARED BY OTHER DESIGN PROFESSIONALS WHO ARE LICENSED AND AUTHORIZED TO PREPARED SUCH DRAWINGS IN THIS STATE. THESE DOCUMENTS HAVE BEEN EXAMINED BY ME AND HAVE BEEN FOUND TO MEET THE APPROPRIATE REQUIREMENTS OF TITLE 24, CALIFORNIA CODE OF REGULATIONS AND THE PROJECT SPECIFICATIONS PREPARED BY ME.
THE ITEMS LISTED BELOW ARE ACCEPTABLE FOR INCORPORATION INTO THE CONSTRUCTION OF THIS PROJECT FOR WHICH I AM THE INDIVIDUAL DESIGNATED TO BE IN GENERAL RESPONSIBLE CHARGE (OR FOR WHICH I HAVE BEEN DELEGATED RESPONSIBILITY FOR THIS PORTION OF THE WORK).
LIST ITEMS REVIEWED AND ACCEPTED. (FOR DRAWINGS, A LIST OF ALL ACCEPTED DRAWINGS ARE TO BE ATTACHED).

LICENSED ARCHITECT STEPHEN J. COPPA No. C-16788 EXP. 11/30/01 STATE OF CALIFORNIA

Stephen J. Coppa, M.ARC, AIA DATE 08/01/01

LICENSE # C-16788

EXP. DATE 11/30/01

IDENTIFICATION STAMP
DIV. OF THE STATE ARCHITECT
APPROVED
AC ____ FLS ____ SS ____
DATE FEB 2 8 2001

IDENTIFICATION STAMP
DIV. OF THE STATE ARCHITECT
OFFICE OF REGULATION SERVICES
PC-374
AC: ____ FLS: ____ SS: KA
DATE: 10-24-97

36'x40' BLDG. AND 18'x40' BLDG.

DESIGN (1996 CBC)			
ROOF LIVE LOAD	= 20	PSF	(SNOW)
FLOOR LIVE LOAD	= 50 (100 AS.)	PSF	
WIND	= 75	MPH	EXP C
SEISMIC ZONE	= 4		

REVISIONS	BY

PACESETTER INDUSTRIES, INC.

P.O. BOX 1131, MODESTO, CA 95353 (209) 521-1600

36x40 ~~& 18x40~~ RELOCATABLE BUILDINGS

FLOOR PLANS - 36'x40'

REGISTERED PROFESSIONAL ENGINEER BRUCE D. DOIG No. 2522 STRUCTURAL STATE OF CALIFORNIA

EXPIRES 3-31-00

ANDERSON & DOIG STRUCTURAL ENGINEERS
A CALIFORNIA CORPORATION
10308 PLACER LANE, STE. 100, SACRAMENTO, CA 95827-2511
(916) 364-9622 FAX (916) 364-9623

DRAWN	KE
CHECKED	BD/JEM
DATE	10-3-97
SCALE	AS NOTED
JOB NO.	97055 4840
SHEET	S2.5
OF	SHEETS

H:\PROJECTS\PROJ_97\97055_4840\S2_5.DWG Fri Oct 03 17:34:19 1997