HDR. SCHEDULE

SPAN (OPNG. WIDTH)	STUD WALL	HDR. SIZE	8dx3" NAILS EA. END HDR. (FROM TRIMMER)	TRIMMERS E.S. OF OPENING
4'-0" MAX.	2x4	4x4 (1)	4	2- 2x4
6'-0" MAX.	2x4	4x6 (1)	6	3- 2x4
8'-0" MAX.	2x4	4x6 (1)	8	3- 2x4

NOTE (1): SEE (L / S0.2) FOR ALT. HDRS.

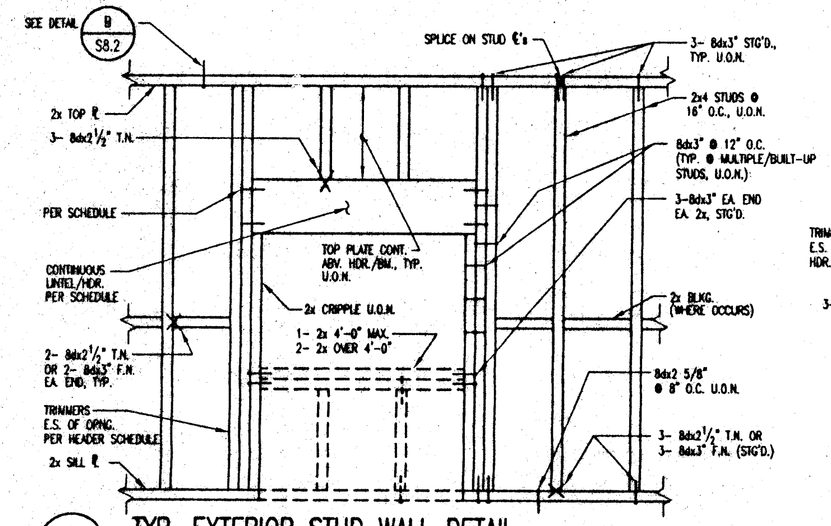

A / S0.2 TYP. EXTERIOR STUD WALL DETAIL

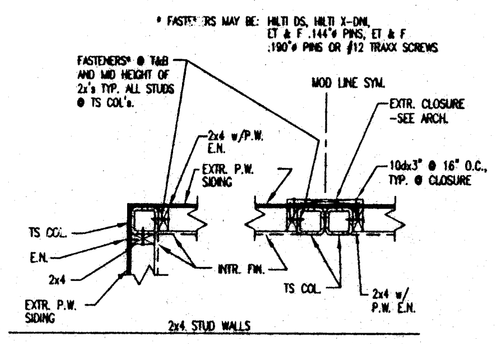

TYPICAL CORNER DETAILS - PLAN VIEW

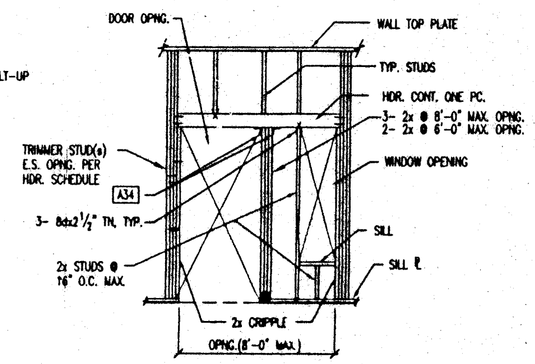

ALT. CONFIGURATION AT DOOR/WIND. OPNG.
(INFO NOT NOTED SIM. DETAIL @ LEFT, TYP.)

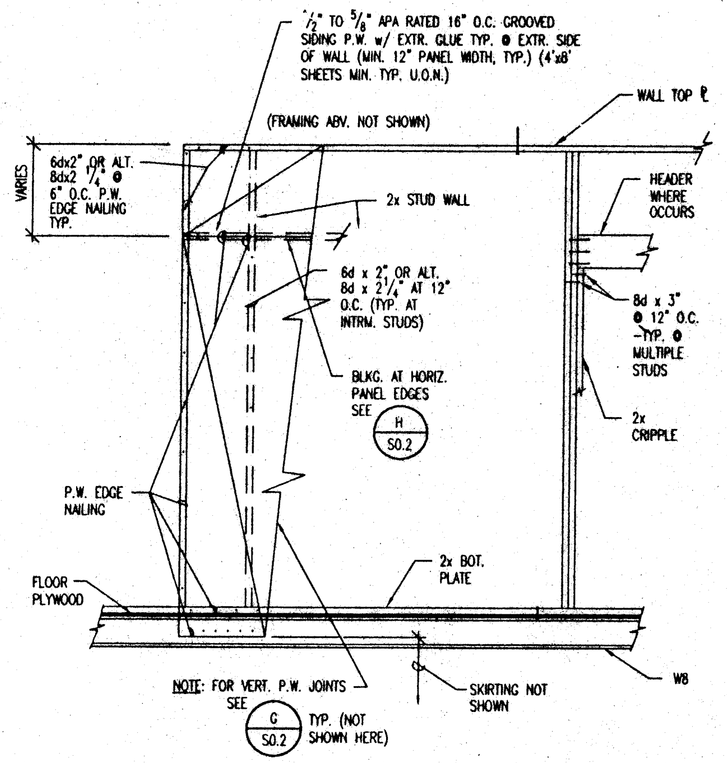

B / S0.2 TYP. DET. - EXTR. STUD WALL SHEATHING

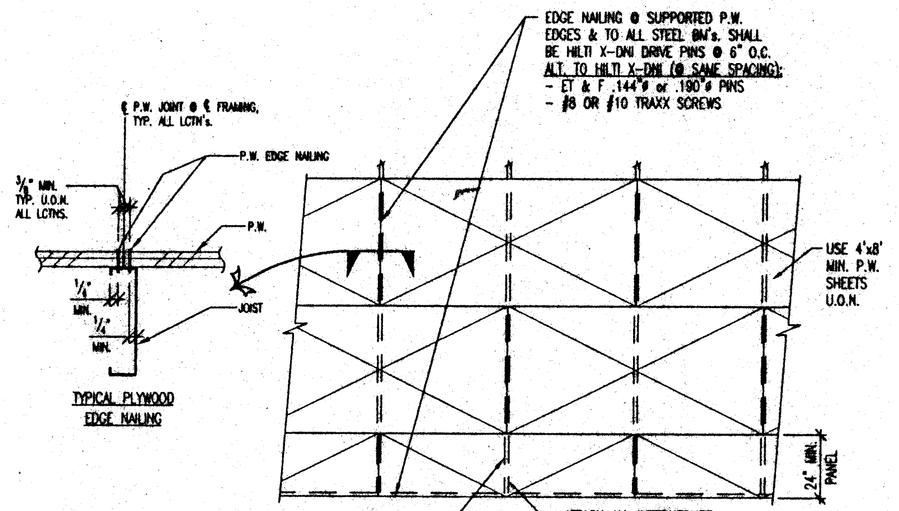

AT ROOFS AND FLOORS PLYWOOD SHEATHING SHALL BE LAID WITH LONG DIMENSION PERPENDICULAR TO FRAMING. SHORT SIDE SHALL SPLICE OVER FRAMING. STAGGER SHEETS AS SHOWN.

C / S0.2 TYP. P.W. SHEATHING DETAIL (ROOF & FLOOR)

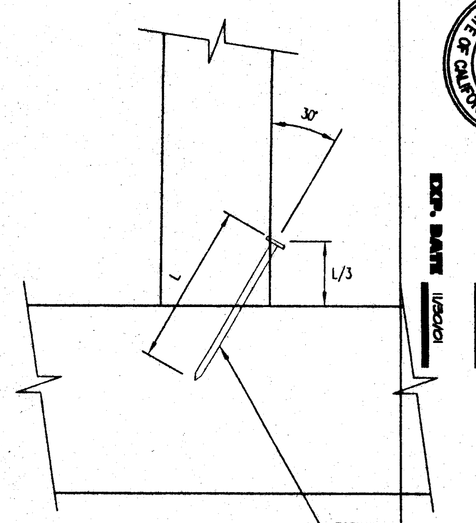

D / S0.2 TYPICAL TOENAIL DETAIL

NOTE: SEE ALSO J / S0.2 FOR FRAMING OF OPNG. IN STUD WALLS @ WALL MOUNTED HVAC UNITS

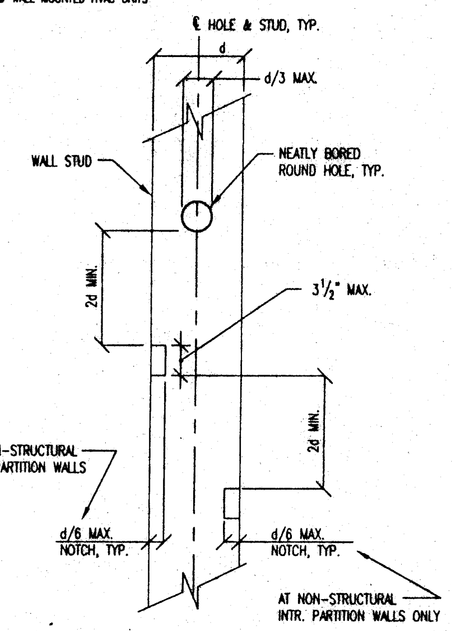

E / S0.2 ALLOW. CUTS IN WALL STUDS

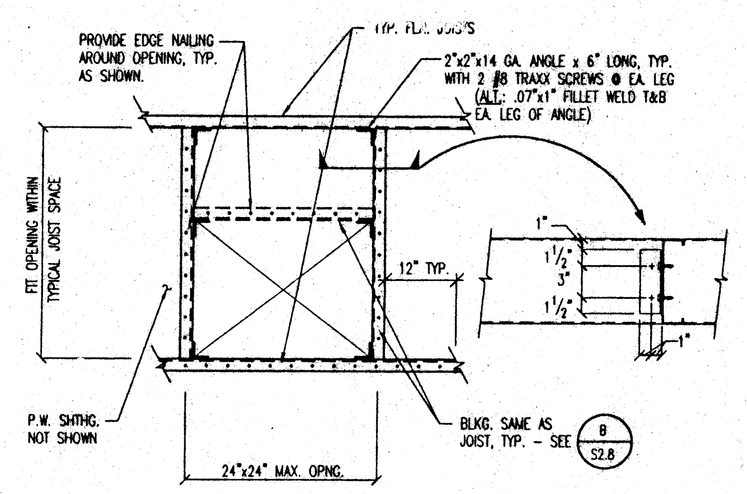

F / S0.2 DET.-TYP. FLOOR FRAMING @ OPENING

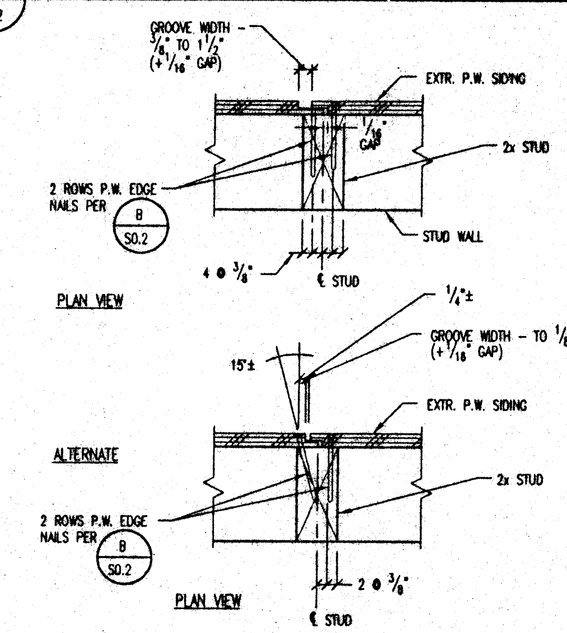

IDENTIFICATION STAMP DIV. OF THE STATE ARCHITECT
APPROVED
AC ___ PLS ___ SS ___
DATE ___

G / S0.2 DET.-VERTICAL P.W. JOINT @ WALL

NOTE: COMPLY WITH ALL APA RECOMMENDATIONS FOR SIDING PLYWOOD INSTALLATION, TYPICAL.

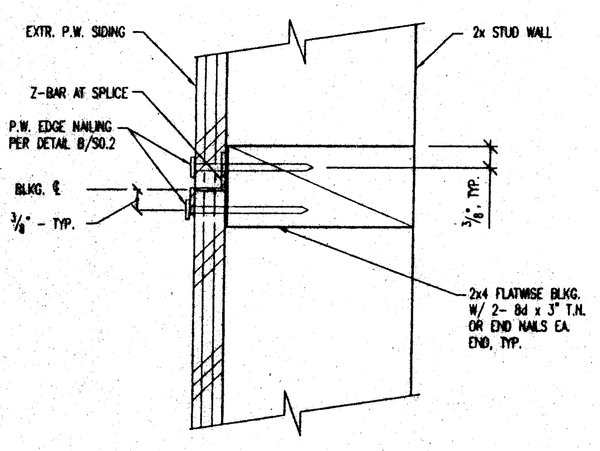

H / S0.2 DET.-HORIZ. P.W. JOINT @ WALL

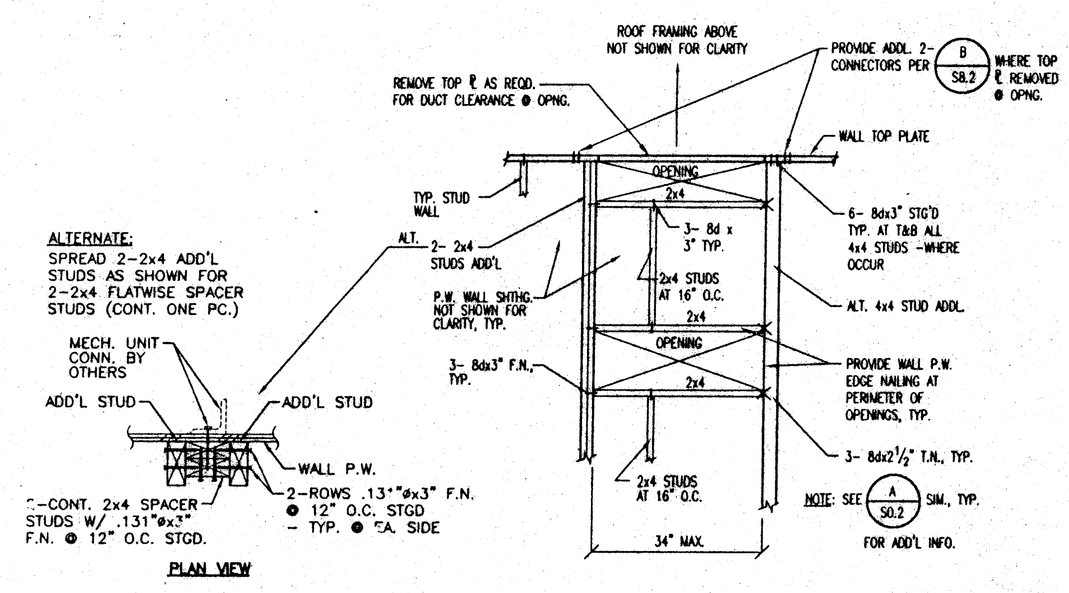

J / S0.2 TYP. HVAC FRAMING DET. @ STUD WALL
(@ WALL MOUNTED UNIT)

SIMPSON STRONG-TIE CONNECTORS SHOWN ON DRAWINGS	ALTERNATE - SILVER/USP LUMBER CONNECTOR
A34	A2
A35	A5A
ST18	ST18
PSCL	PC

NOTE:
USP LUMBER CONNECTORS BY UNITED STEEL PRODUCTS SHALL BE INSTALLED IN ACCORDANCE WITH ICBO REPORT 2039.

K / S0.2 ACCEPTABLE ALTERNATE FRAMING CONNECTOR TABLE

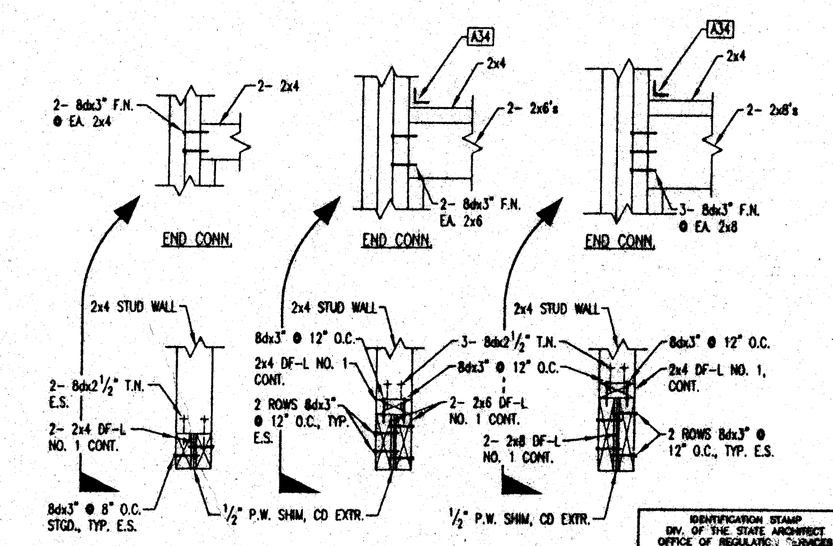

NOTE: ALL MEMBERS CONT. ONE PC. (EXCEPT P.W. SHIMS.)

L / S0.2 ALT. WOOD STUD WALL HDR's DETAIL

IDENTIFICATION STAMP
DIV. OF THE STATE ARCHITECT
OFFICE OF REGULATION SERVICES
PC-374
AC ___ PLS ___ SS ___
DATE 10-21-97

36'x40' BLDG. AND 40'x40' BLDG.

DESIGN (1995 CBC)				
ROOF LIVE LOAD	=	20	PSF	(SNOW)
FLOOR LIVE LOAD	=	50 (100 ALT.)	PSF	
WIND	=	75	MPH	EXP C
SEISMIC ZONE	=	4		

REVISIONS	BY

PACESETTER INDUSTRIES, INC.

P.O. BOX 1131, MODESTO, CA 95353 (209) 521-1600

36x40 & ~~40x40~~ RELOCATABLE BUILDINGS

TYPICAL DETAILS

REGISTERED PROFESSIONAL ENGINEER BRUCE D. DOIG No. 2822 STRUCTURAL STATE OF CALIFORNIA

EXPIRES 3-31-00

ANDERSON & DOIG STRUCTURAL ENGINEERS
A CALIFORNIA CORPORATION
10308 PLACER LANE, STE 100, SACRAMENTO, CA 95827-2511
(916) 366-9622 FAX (916) 366-9623

DRAWN	JR
CHECKED	BD/PLS
DATE	10-3-97
SCALE	N.T.S.
JOB NO.	97065 4840
SHEET	S0.2
OF	SHEETS

THESE DRAWINGS AND / OR SPECIFICATIONS AND / OR CALCULATIONS FOR THE ITEMS LISTED BELOW HAVE BEEN PREPARED BY OTHERS OF THE STATE OF CALIFORNIA AND HAVE BEEN EXAMINED BY ME AND HAVE BEEN FOUND TO MEET THE APPROPRIATE REQUIREMENTS OF TITLE 24, CALIFORNIA CODE OF REGULATIONS AND THE PROJECT SPECIFICATIONS PREPARED THEREFOR. I AM FAMILIAR WITH THE ITEMS LISTED BELOW ARE ACCEPTABLE FOR INCORPORATION INTO THE CONSTRUCTION OF THIS PROJECT FOR WHICH I HAVE BEEN DELEGATED RESPONSIBILITY FOR THIS PORTION OF THE WORK. I AM ALSO ACCEPTING AND ACCEPTING FOR DRAWINGS, ALTERNATE ALL ACCEPTED DRAWINGS LIST TO BE ATTACHED.)
LICENSED ARCHITECT STEPHEN L. SCHOLZ No. C-16788 CALIFORNIA
LICENSE # C-16788
EXP. DATE 10/31/97
SIGN
DATE 10/3/97

D:\PROJECTS\PROJ_97\97065_4840\S0_2.dwg Fri Oct 03 15:52:59 1997