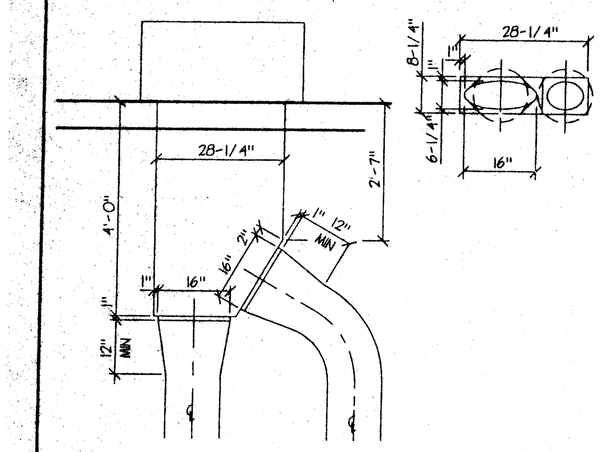

4 ALT. PLENUM DETAILS

SCALE: 1/2"=1'-0"

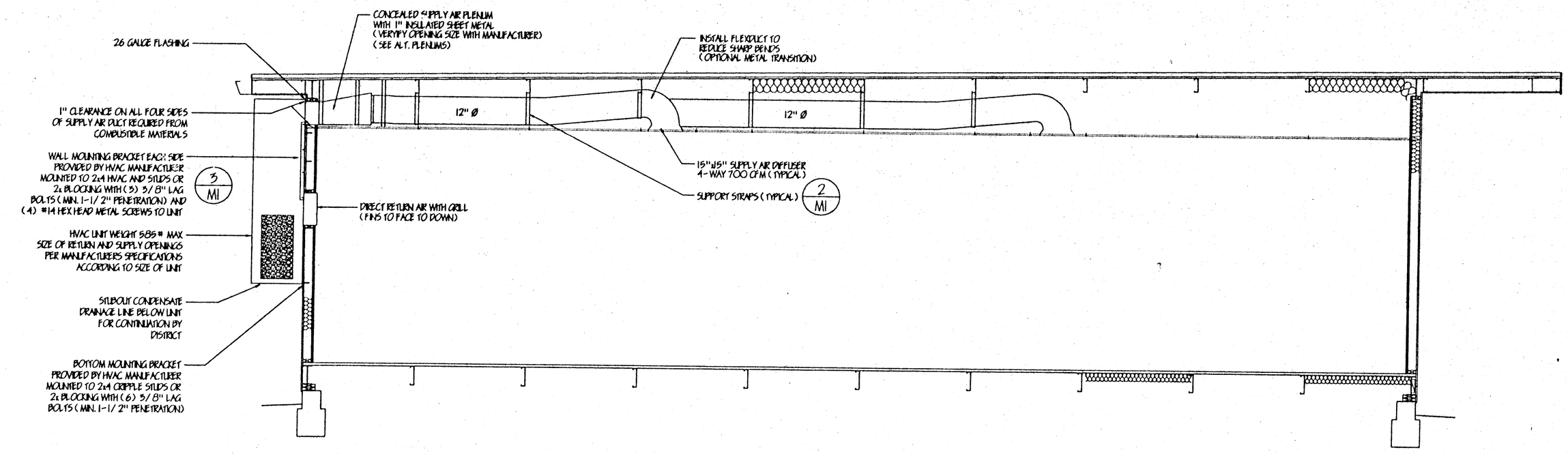

HEAT/SUPPLY AIR DUCT CROSS SECTION

SCALE: 3/8"=1'-0"

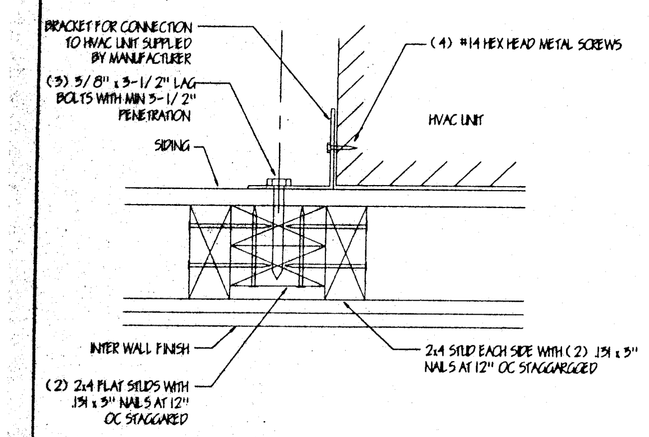

3 ALT. WALL FRAMING AT HVAC

SCALE: 3"=1'-0"

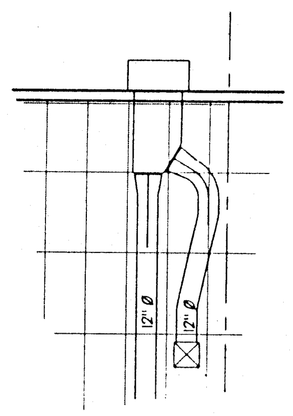

ALT. PLENUM PLANS

SCALE: 1/8"=1'-0"

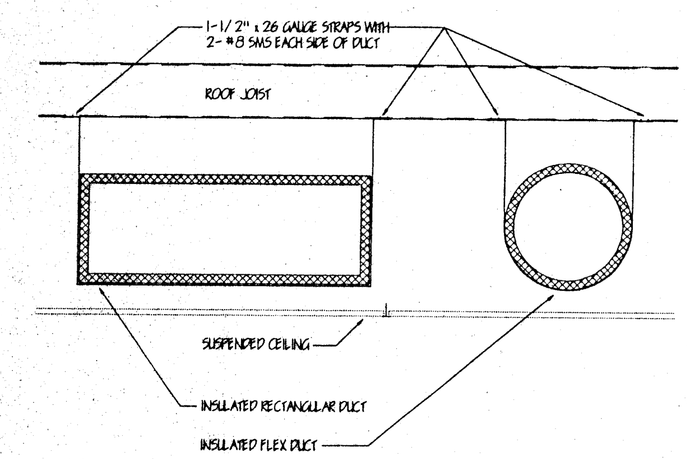

2 DUCT MOUNTING

SCALE: 1"=1'-0"

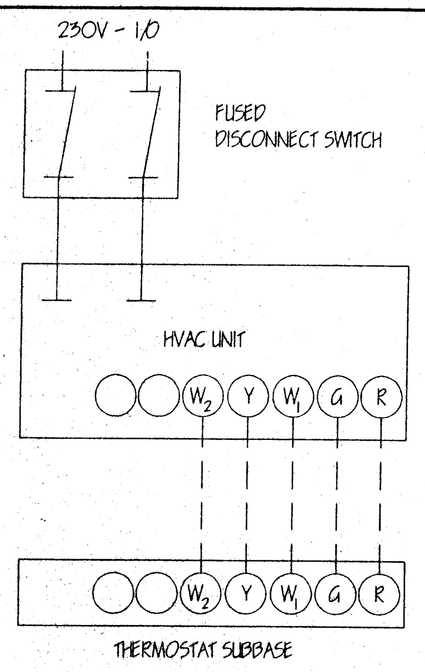

1 CONTROL SCHEMATIC

SCALE: NONE

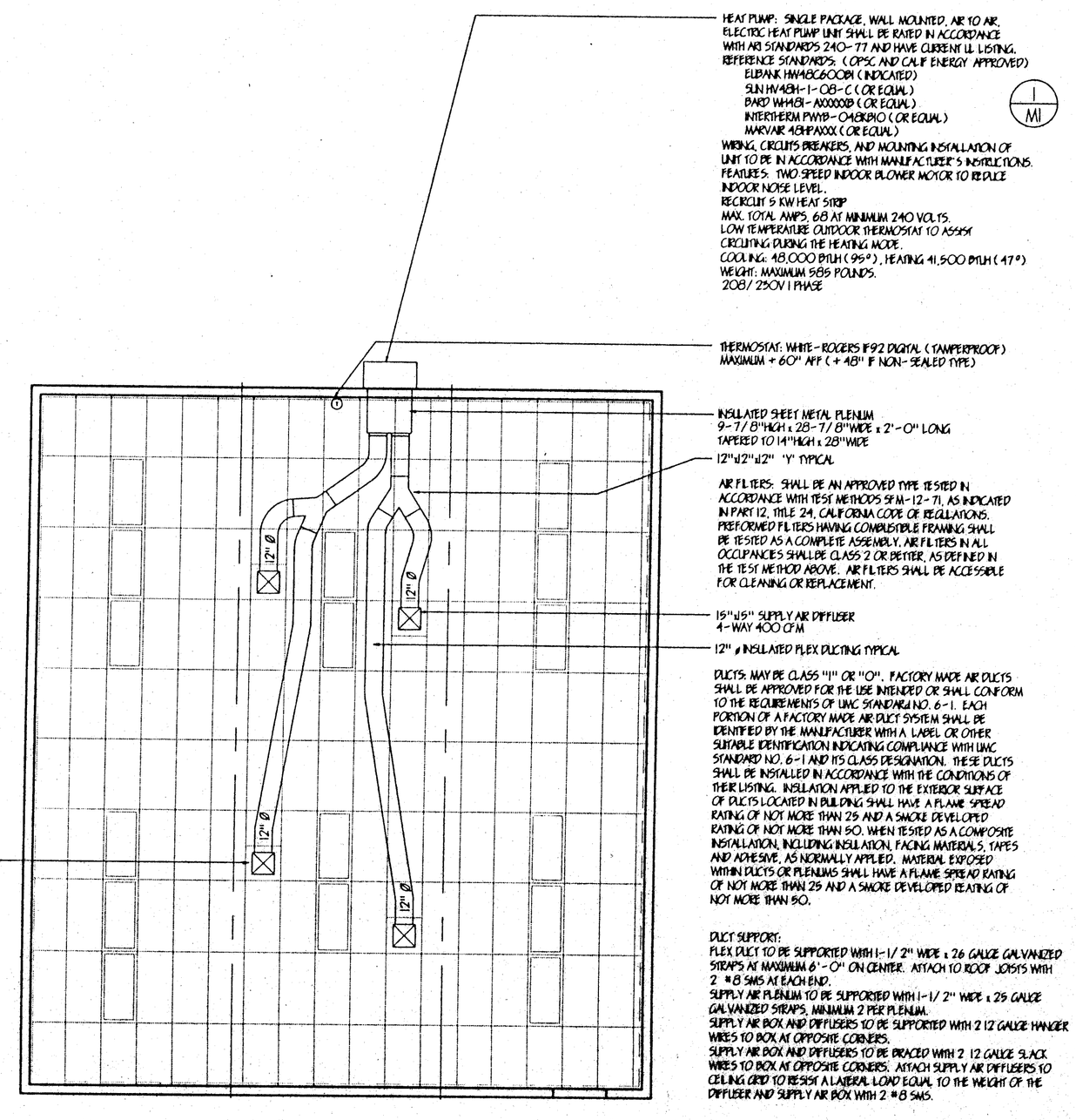

36'x40' MECHANICAL (HVAC) PLAN

SCALE: 3/16"=1'-0"

(REVISED PLAN SHEET)

THESE DRAWINGS AND / OR SPECIFICATIONS AND / OR CALCULATIONS FOR THE ITEMS LISTED BELOW HAVE BEEN PREPARED BY OTHER DESIGN PROFESSINOALS WHO ARE LICENSED AND AUTHORIZED TO PREPARED SUCH DRAWINGS IN THIS STATE. THESE DOCUMENTS HAVE BEEN EXAMINED BY ME AND HAVE BEEN FOUND TO MEET THE APPROPRIATE REQUIREMENTS OF TITLE 24, CALIFORNIA CODE OF REGULATIONS AND THE PROJECT SPECIFICATIONS PREPARED BY ME.
THE ITEMS LISTED BELOW ARE ACCEPTABLE FOR INCORPORATION INTO THE CONSTRUCTION OF THIS PROJECT FOR WHICH I AM THE INDIVIDUAL DESIGNATED TO BE IN GENERAL RESPONSIBLE CHARGE (OR FOR WHICH I HAVE BEEN DELEGATED RESPONSIBILITY FOR THIS PORTION OF THE WORK).
LIST ITEMS REVIEWED AND ACCEPTED (FOR DRAWINGS, A LIST OF ALL ACCEPTED DRAWINGS ARE TO BE ATTACHED).

LICENSED ARCHITECT STEPHEN J. GEIGER No. C-16788 EXP. 11/30/01 STATE OF CALIFORNIA

SIGNATURE: STEPHEN J. GEIGER, AIA DATE 05/21/00

LICENSE # C-16788

EXP. DATE 11/30/01

GENERAL NOTES

THE SEISMIC ANCHORAGE OF MECHANICAL EQUIPMENT SHALL CONFORM TO CCR TITLE 24. (SEE STRUCTURAL DRAWINGS)

ANCHORAGE DETAILS FOR ROOF/FLOOR MOUNTED EQUIPMENT LESS THAN 400 POUNDS AND HUNG EQUIPMENT LESS THAN 20 POUNDS MAY BE OMITTED FROM THE DRAWINGS.

ALL MECHANICAL EQUIPMENT SHALL BE BRACED OR ANCHORED TO RESIST A HORIZONTAL FORCE ACTING IN ANY DIRECTION USING THE FOLLOWING:
EQUIP. ON GRADE: 20% OF OPERATION WEIGHT
EQUIP. ON STRUCTURE: 50% OF OPERATING WEIGHT
FOR FLEXIBLY MOUNTED EQUIPMENT USE 4 TIMES THE ABOVE VALUES. FOR SMALL TANK OR VERTICAL FORCE USE 1/3 TIMES THE HORIZONTAL FORCE. THE ABOVE VALUES ARE FOR AN IMPORTANCE FACTOR, I=1.0 AND SEISMIC ZONE, Z=4

WHERE ANCHORAGE DETAILS ARE NOT SHOWN, THE FIELD INSTALLATION SHALL BE SUBJECT TO THE APPROVAL OF THE ARCHITECT, AND THE FIELD ENGINEER OF DSA.

ALL FINISHES SHALL COMPLY WITH CBC CHAPTERS 5, 6, 7, 8, AND 10

DUCTWORK SHALL BE RIGIDLY ATTACHED TO BUILDING AND SHALL NOT BE CLOSER THAN 6" TO HANGER WIRES.

REGISTERS SHALL BE POSITIVELY ATTACHED WITH 4-16GA SHEET METAL SCREWS OR AS NOTED.

CEILING PANELS: 2'x4' LAY-IN PANELS, ASTM FLAME SPREAD CLASS I (0-25), FLAME SPREAD SMOKE DEVELOPMENT DENSITY LESS THAN 450.

SEE SHEET A1 FOR GENERAL SPECIFICATIONS AND VARIABLE SPECIFICATIONS

SEE SHEET S0.1 FOR STRUCTURAL NOTES
SEE DETAIL 1/S0.2 FOR STRUCTURAL FRAMING

ABBREVIATIONS:

AL OR ALUM	ALUMINUM
NR	NOT RATED
NO.	NUMBER
MIN.	MINIMUM
MAX.	MAXIMUM
AFF	ABOVE FINISH FLOOR

LEGEND

- T BAR CEILING (HANGER, CROSS RUNNER)
- INDICATED FIXED SIDE
- INDICATED FREE SIDE
- SPLAY WIRE - 4 WAY
- THERMOSTAT AT + 60" AFF (SEALED) AT + 48" AFF (NOT SEALED)
- 2'x4' RECESSED LIGHT FIXTURE
- SUPPLY AIR DIFFUSER (15"x15" SUPPLY AIR GRILLE 4-WAY, 700 CFM)

APPROVALS

IDENTIFICATION STAMP
DIV. OF THE STATE ARCHITECT
APPROVED
AC
DATE FEB 1 2001

IDENTIFICATION STAMP
DIV. OF THE STATE ARCHITECT
OFFICE OF REGULATION SERVICES
PC 374
AC
DATE

NORMAN A. GEIGER
AIA, CSI, CDT, ICBO
P.O. BOX 41054
Sacramento, CA 95841
(916) 332-2453 FAX
(916) 332-2453 PHONE
GRAFICS ARCHITECTURAL SERVICES
GEIGER

PACESETTER INDUSTRIES, INC.
P.O. BOX 1131, MODESTO, CA 95353 (209) 521-1600

36x40 RELOCATABLE BUILDING

SHEET CONTENTS:
MECHANICAL (HVAC) PLAN
HEAT/SUPPLY CROSS SECTION
GENERAL NOTES
CONTROL SCHEMATIC
DETAILS

DATE:	AUGUST 28, 1997
DRAWING SCALE:	AS SHOWN
PROJECT NUMBER:	97-05
SHEET	M1
OF	

COMPUTER SCALE: 3/16"=1'-0"
PACESETTER/ASHVO/M.DWG