PANEL SCHEDULE L-1

NEMA-1
125 AMPS
1 Ø PHASE

120/240 V
3 WIRE
INTERIOR

DESCRIPTION	LOAD	BKR			BKR	LOAD	DESCRIPTION
RECEPTS, CLOCK	1800	20/1	1	2	60/*	1050	HVAC UNIT
RECEPTS, CLOCK	1825	20/1	3	4	2		
INTERIOR LIGHTS	900	20/1	5	6			
INT & EXT LIGHTS	935	20/1	7	8			
INTERIOR LIGHTS	900	20/1	9	10			
INT & EXT LIGHTS	935	20/1	11	12			
			13	14			
			15	16			
			17	18			
			19	20			
			21	22			
			23	24			
	5460					1050	

* CIRCUIT BREAKER TO BE IN ACCORDANCE WITH MANUFACTURER'S RECOMENDATIONS

■ FLUSH
□ SURFACE

LIGHTING FIXTURE SCHEDULE

TYPE	MANUFACTURER	LAMPS	INPUT VA	MOUNTING	REMARKS
A	2' x 4' RECESSED ENERGY SAVE BALLAST MOBERN OR EQUAL RG241-44CE	4-40RS 34 WATT	180 VA	SUSPENDED CEILING	T-8 LAMPS OPTIONAL WEIGHT 27# MAX
B	KENDALL 3714 OR EQUAL	1-PLS 7 WATT	37 VA	WALL - SURFACE MIN. 1 8d NAIL OR #8 WS PER STRAP TO STUD	FLUORESCENT TAMPER-PROOF

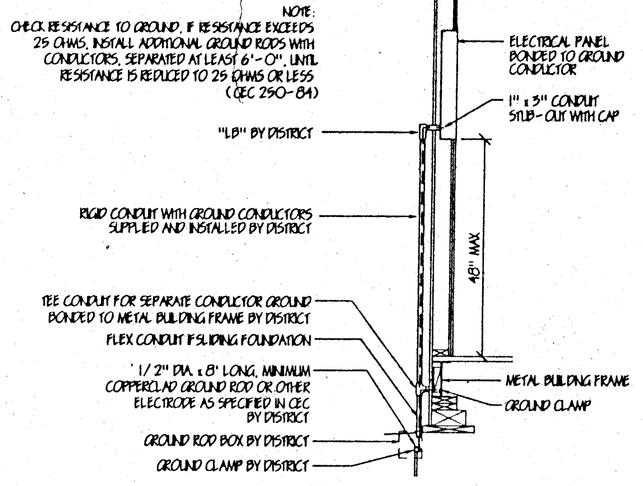

1/E1 BUILDING GROUND SCALE: 1/2"=1'-0"

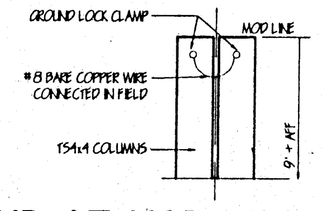

2/E1 BOND AT MOD LINE SCALE: 1"=1'-0"

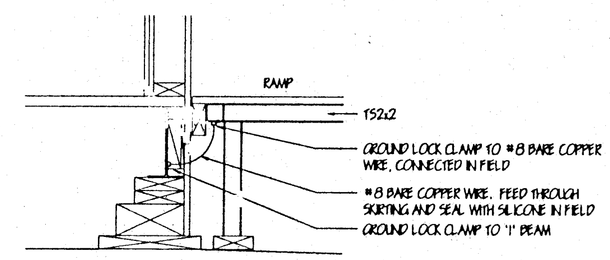

3/E1 BOND AT RAMP SCALE: 1"=1'-0"

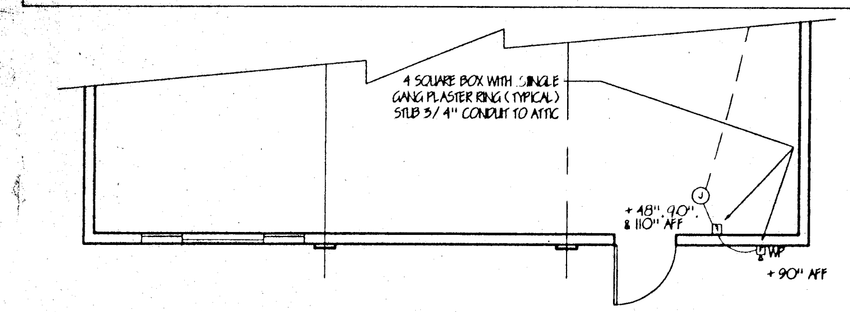

36'x40' SIGNAL PLAN ALT. SCALE: 3/16"=1'-0"

(REVERSE SIMILAR)

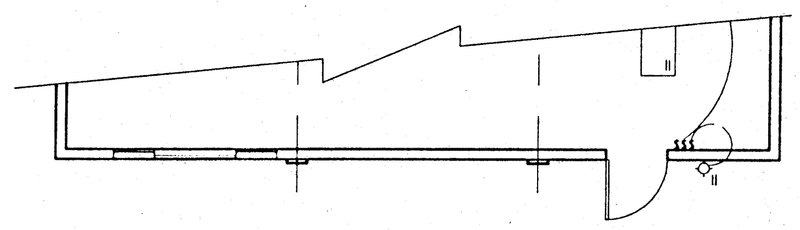

36'x40' LIGHTING PLAN ALT. SCALE: 3/16"=1'-0"

(REVERSE SIMILAR)

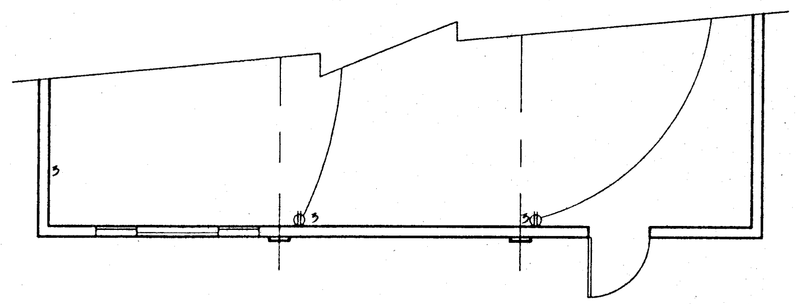

36'x40' POWER PLAN ALT. SCALE: 3/16"=1'-0"

(REVERSE SIMILAR)

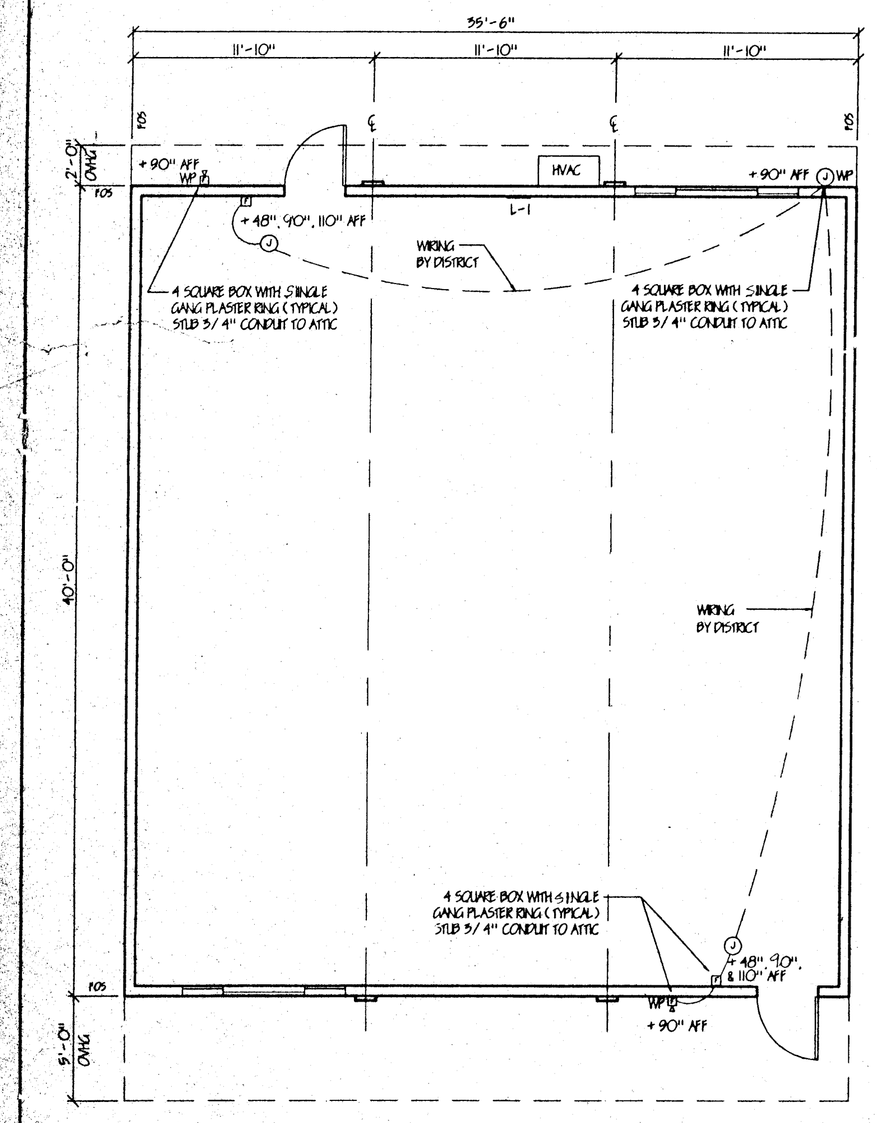

36'x40' SIGNAL PLAN SCALE: 3/16"=1'-0"

(REVERSE SIMILAR)

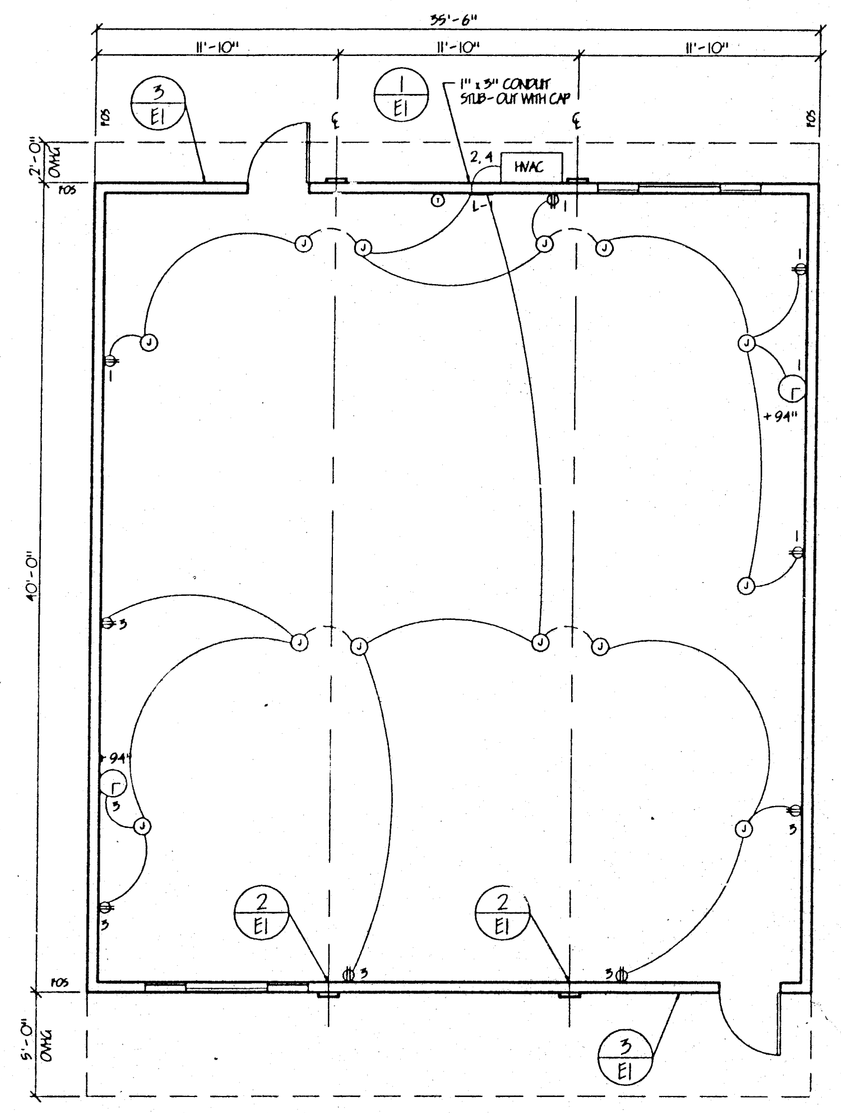

36'x40' POWER PLAN SCALE: 3/16"=1'-0"

(REVERSE SIMILAR)

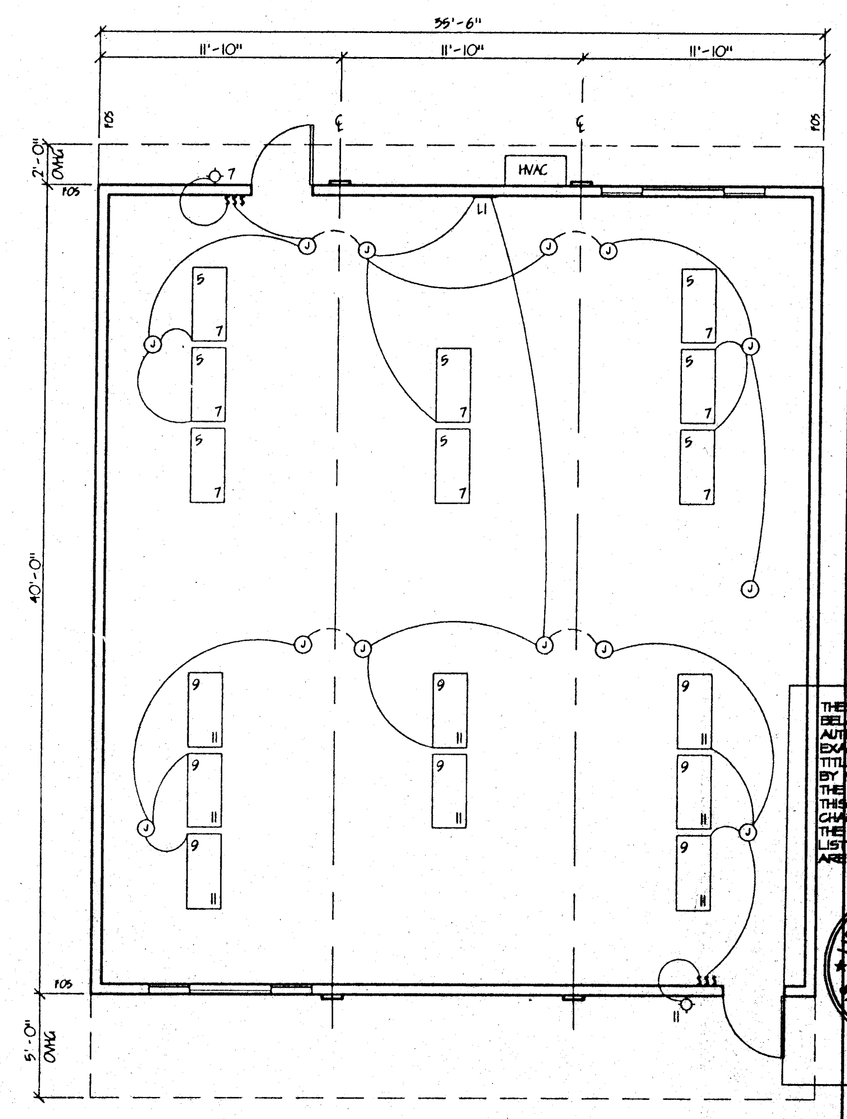

36'x40' LIGHTING PLAN SCALE: 3/16"=1'-0"

(REVERSE SIMILAR)

ELECTRICAL NOTES

PROVIDE 2-12GA. BLACK WIRES TO HOUSING OF ALL LIGHT FIXTURES AT DIAGONAL CORNERS. WIRES SHALL BE ATTACHED TO STRUCTURE. ATTACH WIRES TO LIGHT FIXTURES WITH #8 SHEET METAL SCREW AT EACH CORNER.

ALL WIRING TO BE IN MINIMUM 1/2" CONDUIT.

ALL RACEWAYS SHALL CONTAIN EQUIPMENT GROUNDING CONDUCTOR PER CEC 250-95.

MAIN CIRCUIT BREAKER IN ACCORDANCE WITH CEC (CALIFORNIA ELECTRICAL CODE).

INSTALL FLEXIBLE CONDUIT CONNECTORS TO ELECTRICAL PANEL TO ALLOW FOR MINIMUM MOVEMENT OF 12" IN ANY HORIZONTAL DIRECTION WHEN SLIDING FOUNDATION IS UTILIZED.

A LOCK OFF CLIP IS TO BE PROVIDED FOR THE HEAT PUMP FEEDER CIRCUIT BREAKER.

GROUNDING OF ELECTRICAL SYSTEM IN ACCORDANCE WITH CEC.

CERTIFIED LUMINARES/BALLASTS IN ACCORDANCE WITH CEC.

INDEPENDANT CONTROL WITHIN ENCLOSED AREAS IN ACCORDANCE WITH CEC.

MANUAL SWITCHING READILY ACCESSIBLE IN ACCORDANCE WITH CEC.

REDUCTION OF LIGHTING LOAD AT LEAST 50% IN ACCORDANCE WITH CEC.

SEPARATE SWITCHING OF DAYLIGHT AREAS IN ACCORDANCE WITH CEC.

RANDOM WIRING OF 4 LAMP LUMINARES IN ACCORDANCE WITH CEC.

ALL ELECTRICAL WIRING 110V AND GREATER SHALL BE IN CONDUIT SYSTEMS AND SHALL MEET OR EXCEED THE REQUIREMENTS OF THE CEC.

ALL CONDUITS SHALL BE CONTINUOUS FROM OUTLET TO OUTLET AND SHALL BE SECURED IN CONFORMANCE WITH PART 3, TITLE 24, CCR.

ALL CONDUIT SHALL BE REAMED AND DEBURRED PRIOR TO INSTALLATION AND SHALL TERMINATE IN APPROPRIATE BUSHINGS OR CONDUCTORS.

CONDUIT FILL SHALL NOT EXCEED REQUIREMENTS OF PART 3, TITLE 24, CCR.

A SEPARATE GROUNDING CONDUCTOR SHALL BE PULLED THROUGHOUT THE ENTIRE SYSTEM.

PORTABLE CONTRACTOR SHALL BE RESPONSIBLE FOR PROVIDING NECESSARY CONNECTIONS AND CONDUCTORS TO GROUND THE METAL PORTIONS OF THE BUILDING (I.E., FRAME, RAMP, ETC.).

GROUNDING ROD, WIRES, AND TESTING SHALL BE PROVIDED AND MEET THE REQUIREMENTS OF I.R. #8-1, ISSUED BY DSA.

BUILDING MANUFACTURER TO PROVIDE "LB" FITTING STUB-OUT FROM REAR OF ELECTRICAL ASSEMBLY THROUGH REAR WALL FOR CONNECTION TO DISTRICTS OVERHEAD OR UNDERGROUND SERVICE, AND LB FITTING FOR GROUNDING CABLE.

DISTRICT TO PROVIDE ELECTRICAL SERVICES TO EACH BUILDING.

GROUNDING ELECTRODE CONDUCTOR TO BE SIZED IN ACCORDANCE WITH CEC.

HVAC UNIT FEEDER CIRCUIT, BREAKER FEEDER WIRE AND UNIT DISCONNECT AND FUSES (AS APPLICABLE) ARE TO BE COORDINATED WITH THE UNIT NAME PLATE DATA AT THE TIME OF MANUFACTURE. UNITS HAVING A LARGER KVA RATING THEN INDICATED SHALL NOT BE UTILIZED.

FIRE ALARM SYSTEM.
THE FIRE ALARM SYSTEM SHALL CONFORM TO THE CALIFORNIA ELECTRICAL CODE.

PART OF THE FIRE ALARM SYSTEM WILL BE INSTALLED BY THE PORTABLE MANUFACTURER, AS INDICATED, AND SHALL INCLUDE RECESSED BOXES & CONDUIT, DEVICES, CONDUCTORS, INSTALLATION AND CONNECTION, TO BE BY DISTRICT.

INSTALLATION OF THE FIRE ALARM SYSTEM SHALL NOT BE STARTED UNTIL DETAILED SPECIFICATIONS AND DRAWINGS HAVE BEEN REVIEWED BY DSA.

ADDITIONAL CONDUIT, JUNCTION BOXES, AND RELATED ITEMS SHALL BE INSTALLED BY DISTRICT AS REQUIRED.

DO NOT CONNECT FIRE ALARM CONDUIT WITH ANY OTHER ELECTRICAL CONDUIT.

GENERAL NOTES

VERTICAL WIRES MORE THAN 1 IN 6 OUT OF PLUMB SHALL HAVE COUNTER BRACING WIRES.

ALL FINISHES SHALL COMPLY WITH CBC CHAPTERS 5, 6, 7, 8, AND 10

IDENTIFICATION STAMP
DIV. OF THE STATE ARCHITECT
APPROVED
AL
DATE

ABBREVIATIONS:

AFF	ABOVE FINISH FLOOR
AL. OR ALUM	ALUMINUM
BKR	BREAKER
DIA.	DIAMETER
MAX.	MAXIMUM
MIN.	MINIMUM
NO.	NUMBER
NR	NOT RATED
OVHG	OVERHANG
WP	WEATHERPROOF

LEGEND

CONDUIT

FLEX CONDUIT

WIRING SHALL BE MINIMUM #12 COPPER TYPE THHN OR THWN AS APPLICABLE.
CONDUIT SHALL BE EMT OR GALV. STEEL FLEX, MINIMUM 1/2".

J-BOX
4 SQUARE FLUSH J-BOX WITH SINGLE GANG PLASTER RING AND BLANK COVER.

CLOCK AND RECEPTACLE AT +94" AFF
12" x WALL MOUNTED CLOCK, BRYANT, SLATER, LEVITON OR EQUAL WITH 110V RECEPTACLE.

THERMOSTAT
AT + 60" AFF (SEALED)
AT + 48" AFF (NOT SEALED)
ELECTRONIC PROGRAMMABLE THERMOSTAT WITH THE FOLLOWING FUNCTIONS: 5 AND 2 WEEKDAY/WEEKEND PROGRAMMING WITH MINIMUM OF 4 SEPARATE TIME/TEMPERATURE SETTINGS FOR 24 HOUR PERIOD. PROGRAMMABLE DISPLAY, STATUS INDICATED LED's, BATTERY BACKUP. PROVIDE A LOCKING CLEAR COVER WITH ACCESS HOLE FOR PROGRAM OVERRIDE. WHITE ROGERS 1F92

L-1 — RECESSED PANEL AT + 48" AFF — PANEL NUMBER

5 — DUPLEX WALL RECEPTACLE 20A 120V AT + 18" AFF — CIRCUIT NUMBER — LEVITON, HUBBEL OR EQUAL.

J-BOX FOR FIRE ALARM HORN AT +90" AFF

J-BOX FOR FIRE ALARM PULL STATION AT + 48" AFF

SWITCH (LEVITON, HUBBEL OR EQUAL) AT + 48" AFF

WALL MOUNTED LIGHT FIXTURE AT + 90" AFF TYPE B

5 / 7 — 2'x4' RECESSED LIGHT FIXTURE WITH ENERGY SAVING BALLASTS TYPE A — CIRCUIT NUMBER

APPROVALS

THESE DRAWINGS AND / OR SPECIFICATIONS AND / OR CALCULATIONS FOR THE ITEMS LISTED BELOW HAVE BEEN PREPARED BY OTHER DESIGN PROFESSIONALS WHO ARE LICENSED AND AUTHORIZED TO PREPARED SUCH DRAWINGS IN THIS STATE. THESE DOCUMENTS HAVE BEEN EXAMINED BY ME AND HAVE BEEN FOUND TO MEET THE APPROPRIATE REQUIREMENTS OF TITLE 24, CALIFORNIA CODE OF REGULATIONS AND THE PROJECT SPECIFICATIONS PREPARED BY ME.
THE ITEMS LISTED BELOW ARE ACCEPTABLE FOR INCORPORATION INTO THE CONSTRUCTION OF THIS PROJECT FOR WHICH I AM THE INDIVIDUAL DESIGNATED TO BE IN GENERAL RESPONSIBLE CHARGE (OR FOR WHICH I HAVE BEEN DELIGATED RESPONSIBILITY FOR THIS PORTION OF THE WORK).
LIST ITEMS REVIEWED AND ACCEPTED. (FOR DRAWINGS, A LIST OF ALL ACCEPTED DRAWINGS ARE TO BE ATTACHED).

LICENSED ARCHITECT
STEPHEN J. COBB
No. C-16786
REN. 11/30/97
STATE OF CALIFORNIA

[illegible], AIA — DATE 08/28/97

LICENSE # C-16786

EXP. DATE 11/30/97

IDENTIFICATION STAMP
DIV. OF THE STATE ARCHITECT
OFFICE OF REGULATION SERVICES
PC 374
NO. N/A
DATE

NORMAN A. GEIGER
AIA, CSI, CDT, ICBO
P.O. BOX 41054
Sacramento, CA 95841
(916) 332-2453 FAX
(916) 332-2453 PHONE

GRAFICS ARCHITECTURAL SERVICES
GEIGER

PACESETTER INDUSTRIES, INC.
P.O. BOX 1151, MODESTO, CA 95353 (209) 521-1600

36x40 RELOCATABLE BUILDING

SHEET CONTENTS:
POWER PLAN
LIGHTING PLAN
SIGNAL PLAN
LEGEND
PANEL SCHEDULE
LIGHT FIXTURE SCHEDULE
GENERAL NOTES
ELECTRICAL NOTES
DETAILS

DATE:	AUGUST 28, 1997
DRAWING SCALE:	AS SHOWN
PROJECT NUMBER:	97-05
SHEET	E1
OF	

COMPUTER SCALE: 3/16"=1'-0"
PLOT SCALE: 1 MM/MM = 1'-0"