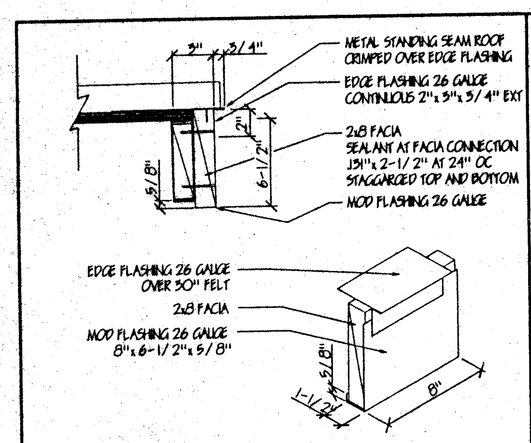

1 ROOF MOD TRIM SCALE: 1-1/2"=1'-0"

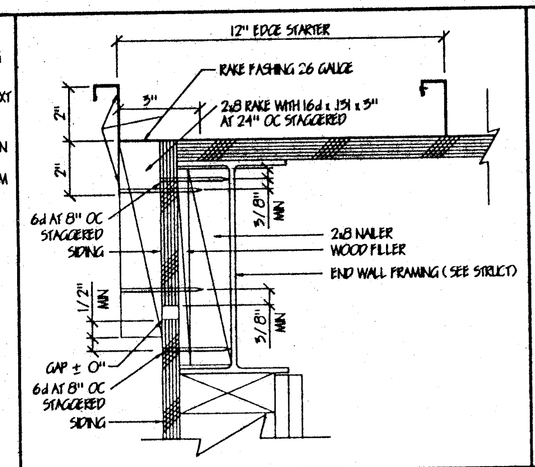

6 ROOF RAKE SCALE: 3"=1'-0"

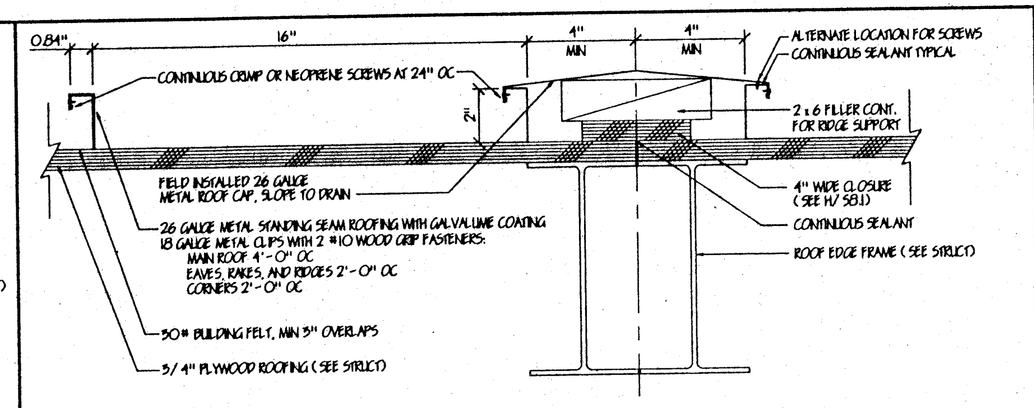

11 MODULE LINE ROOF CAP SCALE: 3"=1'-0"

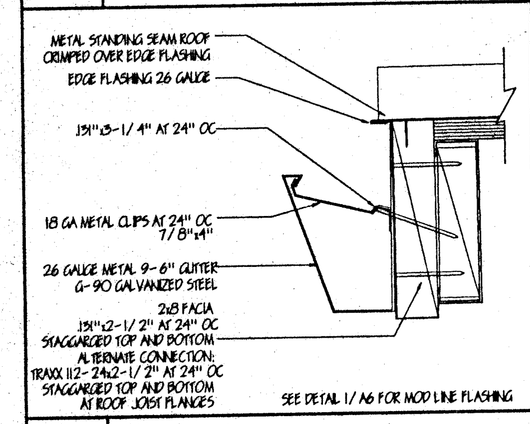

SEE DETAIL 1/ A6 FOR MOD LINE FLASHING

2 GUTTER SCALE: 3"=1'-0"

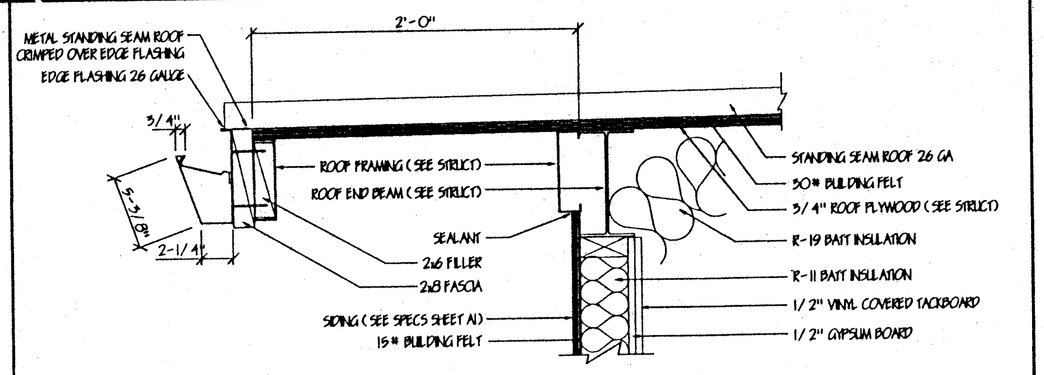

SEE DETAIL 2/ A6 FOR GUTTER

7 REAR OVHG SCALE: 1-1/2"=1'-0"

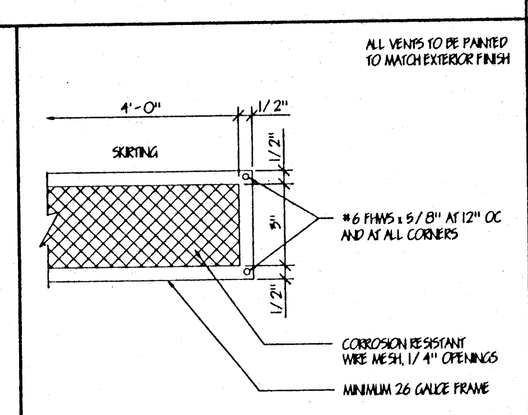

15 VENT SCALE: 3"=1'-0"

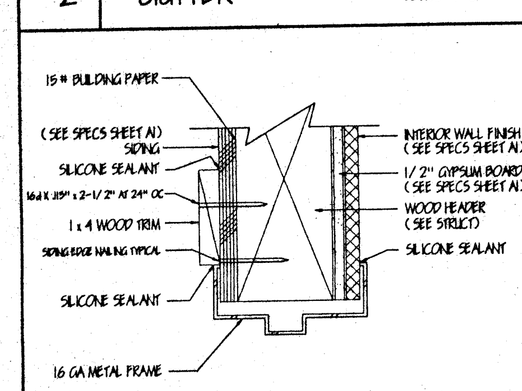

3 DOOR HEAD SCALE: 3"=1'-0"

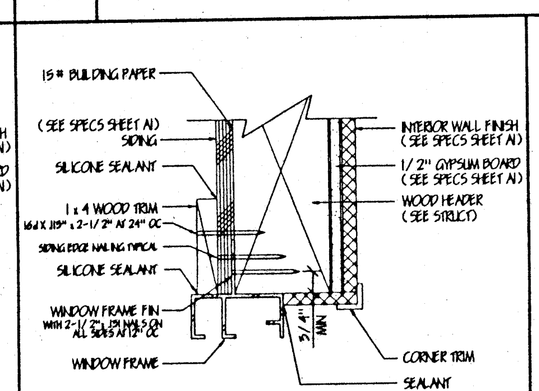

8 WINDOW HEAD SCALE: 3"=1'-0"

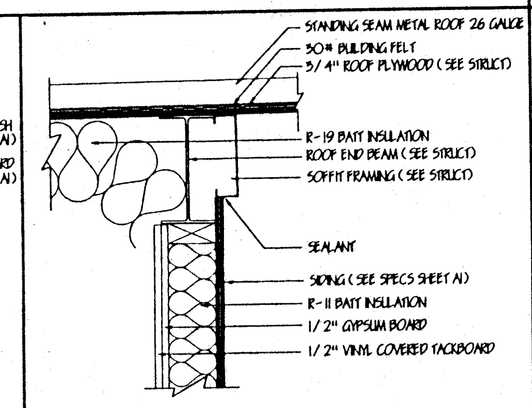

12 ENTRY OVHG SCALE: 1-1/2"=1'-0"

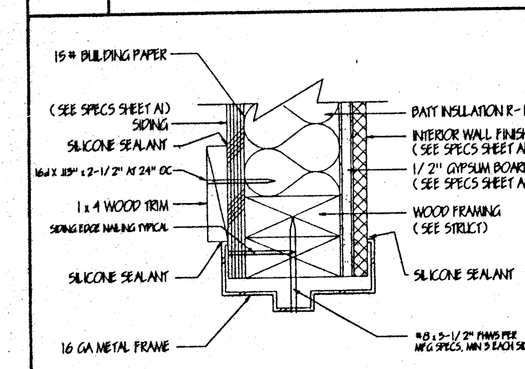

4 DOOR JAMB SCALE: 3"=1'-0"

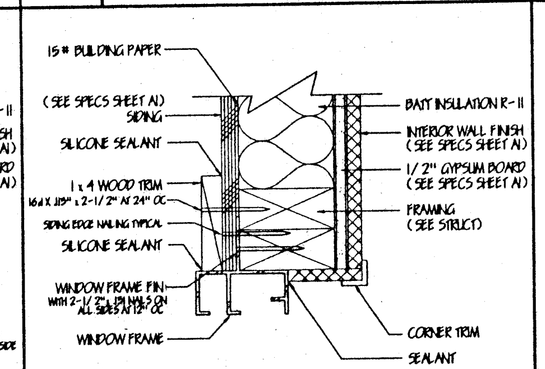

9 WINDOW JAMB SCALE: 3"=1'-0"

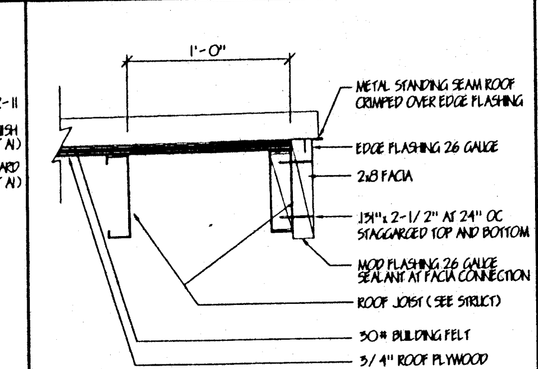

13 ENTRY OVHG SCALE: 1-1/2"=1'-0"

17 OVHG ALTERNATE SCALE: 1-1/2"=1'-0"

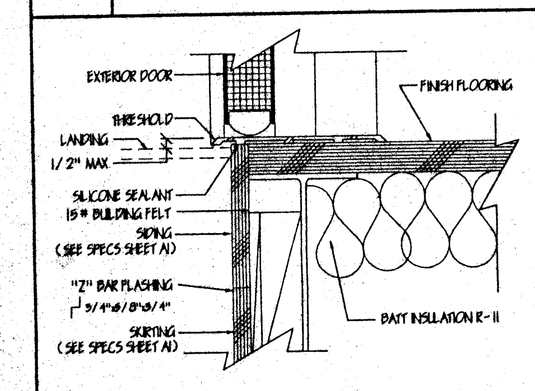

5 DOOR THRESHOLD SCALE: 3"=1'-0"

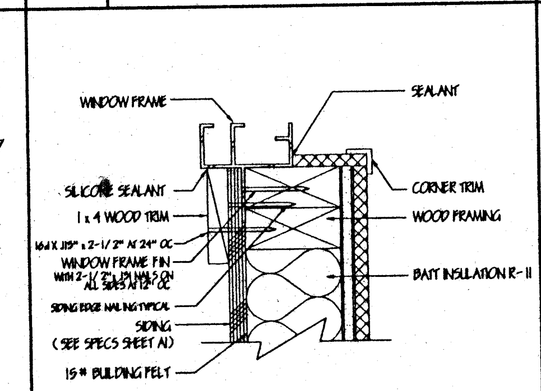

10 WINDOW SILL SCALE: 3"=1'-0"

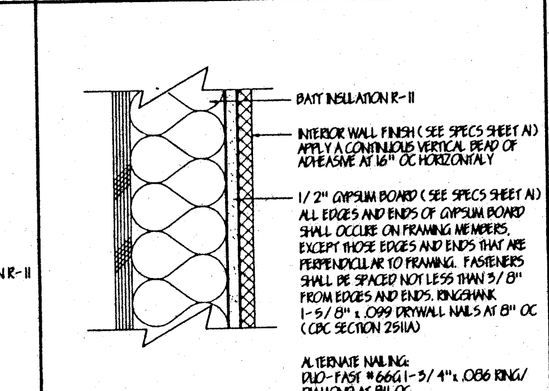

14 WALL FINISH SCALE: 3"=1'-0"

THESE DRAWINGS AND / OR SPECIFICATIONS AND / OR CALCULATIONS FOR THE ITEMS LISTED BELOW HAVE BEEN PREPARED BY OTHER DESIGN PROFESSIONALS WHO ARE LICENSED AND AUTHORIZED TO PREPARED SUCH DRAWINGS IN THIS STATE. THESE DOCUMENTS HAVE BEEN EXAMINED BY ME AND HAVE BEEN FOUND TO MEET THE APPROPRIATE REQUIREMENTS OF TITLE 24, CALIFORNIA CODE OF REGULATIONS AND THE PROJECT SPECIFICATIONS PREPARED BY ME.
THE ITEMS LISTED BELOW ARE ACCEPTABLE FOR INCORPORATION INTO THE CONSTRUCTION OF THIS PROJECT FOR WHICH I AM THE INDIVIDUAL DESIGNATED TO BE IN GENERAL RESPONSIBLE CHARGE (OR FOR WHICH I HAVE BEEN DELEGATED RESPONSIBILITY FOR THIS PORTION OF THE WORK).
LIST ITEMS REVIEWED AND ACCEPTED. (FOR DRAWINGS, A LIST OF ALL ACCEPTED DRAWINGS ARE TO BE ATTACHED).

LICENSED ARCHITECT STEPHEN J. GOGGIN No. C-16788 REN. 11/30/01 STATE OF CALIFORNIA

STEPHEN J. GOGGIN, AIA DATE 8/6/60

LICENSE # C-16788

EXP. DATE 11/30/01

GENERAL NOTES

ALL FINISHES SHALL COMPLY WITH CBC CHAPTERS 3, 6, 7, 8, AND 10

ABBREVIATIONS:

AFF	ABOVE FINISH FLOOR
AL OR ALUM	ALUMINUM
FNDN	FOUNDATION
GA	GAUGE
HM	HOLLOW METAL
INT	INTERIOR
MAX.	MAXIMUM
MFG	MANUFACTURER
MIN	MINIMUM
NO.	NUMBER
NR	NOT RATED
OVHG	OVERHANG
PE	PAIR
STRUCT	STRUCTURAL

LEGEND

BATT INSULATION
WOOD MEMBER
BLOCKING
GYPSUM BOARD
PLYWOOD

APPROVALS

IDENTIFICATION STAMP DIV. OF THE STATE ARCHITECT
APPROVED
AC
DATE

IDENTIFICATION STAMP DIV. OF THE STATE ARCHITECT OFFICE OF REGULATION SERVICES
PC 374
AC
DATE: (2-24-97)

NORMAN A. GEIGER
AIA, CSI, CDT, ICBO
P.O. BOX 41054
Sacramento, CA 95841
(916) 332-2453 FAX
(916) 332-2453 PHONE
GRAFICS ARCHITECTURAL SERVICES
GEIGER

NORMAN A. GEIGER C 20916 10-31-97 STATE OF CALIFORNIA

PACESETTER INDUSTRIES, INC.
P.O. BOX 1151, MODESTO, CA 95353 (209) 521-1600

36x40 RELOCATABLE BUILDING
48x40 RELOCATABLE BUILDING

SHEET CONTENTS:
GENERAL NOTES
DETAILS

DATE:	AUGUST 28, 1997
DRAWING SCALE:	AS SHOWN
PROJECT NUMBER:	97-06

SHEET A6 OF

COMPUTER SCALE: 3/16"=1'-0"