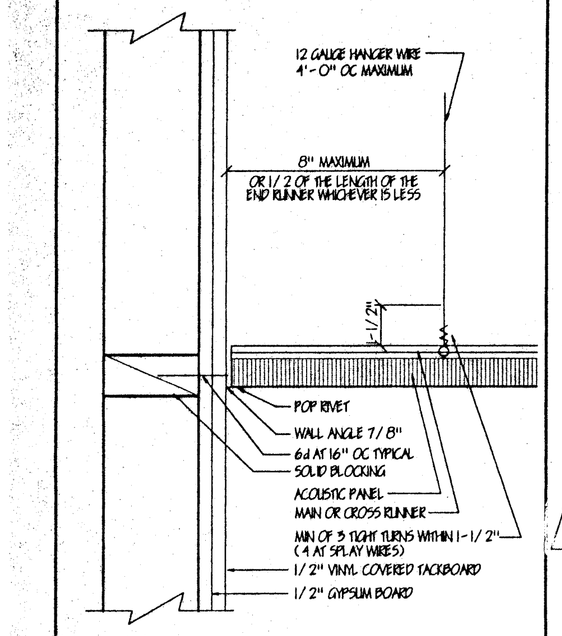

1 TYPICAL FIXED SIDE SCALE: 3"=1'-0"

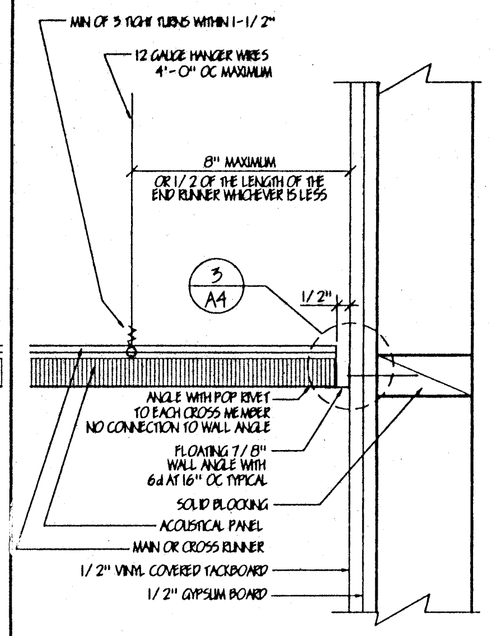

2 TYPICAL FREE SIDE SCALE: 3"=1'-0"

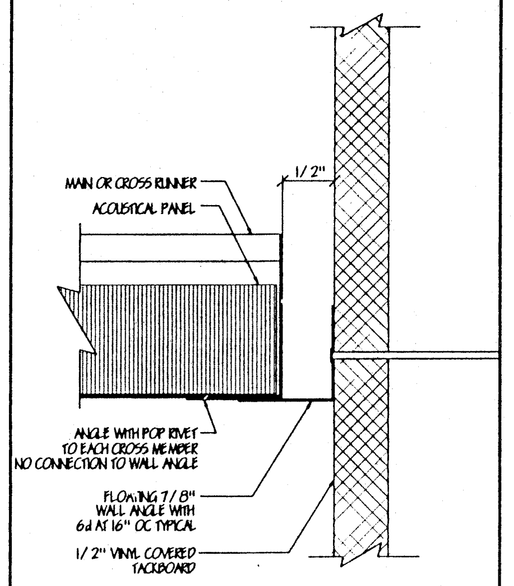

3 TYPICAL FREE CONN. SCALE: 1"=1'

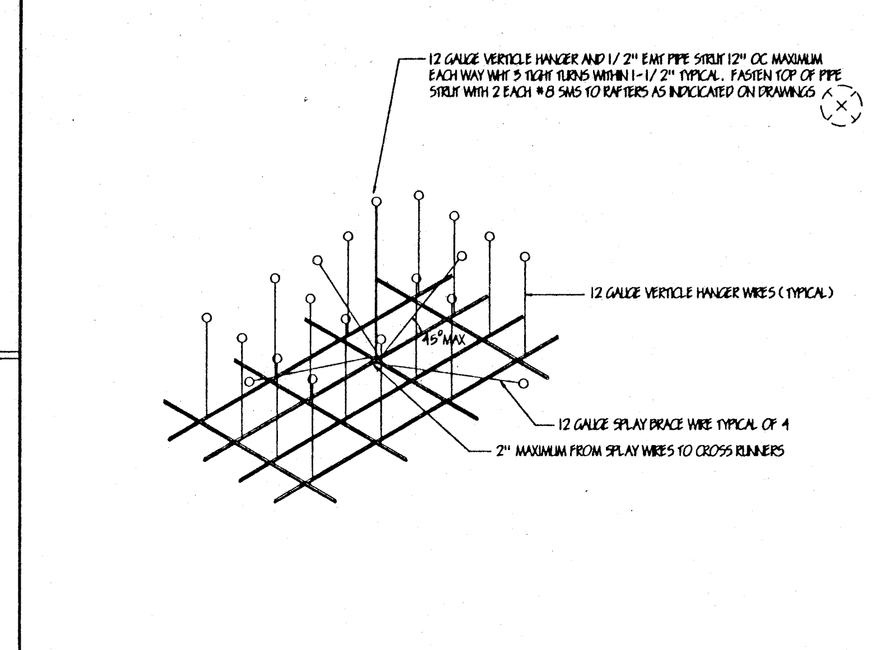

4 ATTACHMENT FOR CEILING GRID NOT TO SCALE

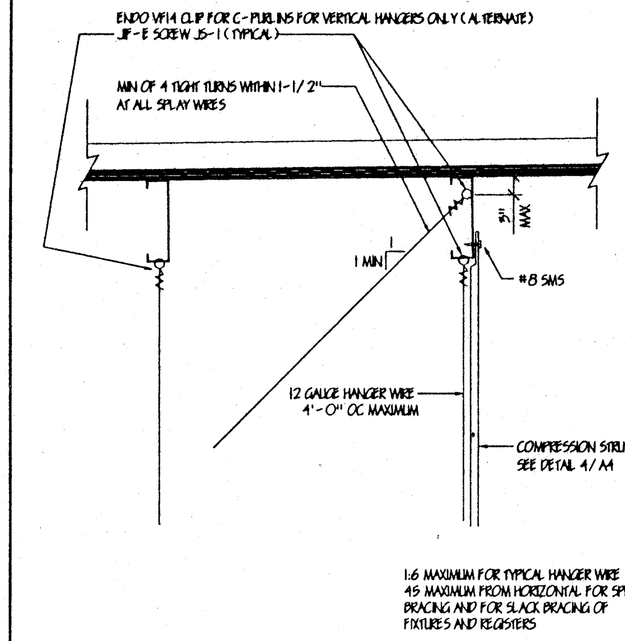

5 ATTACHMENT AT ROOF SCALE: 1-1/2"=1'-0"

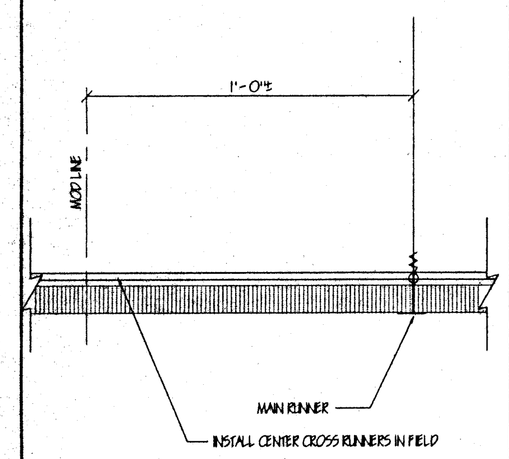

6 GRID AT MOD LINE SCALE: 3"=1'-0"

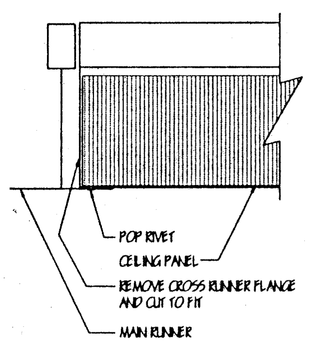

7 GRID AT MOD LINE SCALE: 1"=1'

THESE DRAWINGS AND / OR SPECIFICATIONS AND / OR CALCULATIONS FOR THE ITEMS LISTED BELOW HAVE BEEN PREPARED BY OTHER DESIGN PROFESSIONALS WHO ARE LICENSED AND AUTHORIZED TO PREPARED SUCH DRAWINGS IN THIS STATE. THESE DOCUMENTS HAVE BEEN EXAMINED BY ME AND HAVE BEEN FOUND TO MEET THE APPROPRIATE REQUIREMENTS OF TITLE 24, CALIFORNIA CODE OF REGULATIONS AND THE PROJECT SPECIFICATIONS PREPARED BY ME.
THE ITEMS LISTED BELOW ARE ACCEPTABLE FOR INCORPORATION INTO THE CONSTRUCTION OF THIS PROJECT FOR WHICH I AM THE INDIVIDUAL DESIGNATED TO BE IN GENERAL RESPONSIBLE CHARGE (OR FOR WHICH I HAVE BEEN DELIGATED RESPONSIBILITY FOR THIS PORTION OF THE WORK).
LIST ITEMS REVIEWED AND ACCEPTED. (FOR DRAWINGS, A LIST OF ALL ACCEPTED DRAWINGS ARE TO BE ATTACHED).

LICENSED ARCHITECT STEPHEN L. COBURN No. C-16786 REN. 11/30/01 STATE OF CALIFORNIA

DATE 10/21/97

LICENSE # C-16786

EXP. DATE 11/30/01

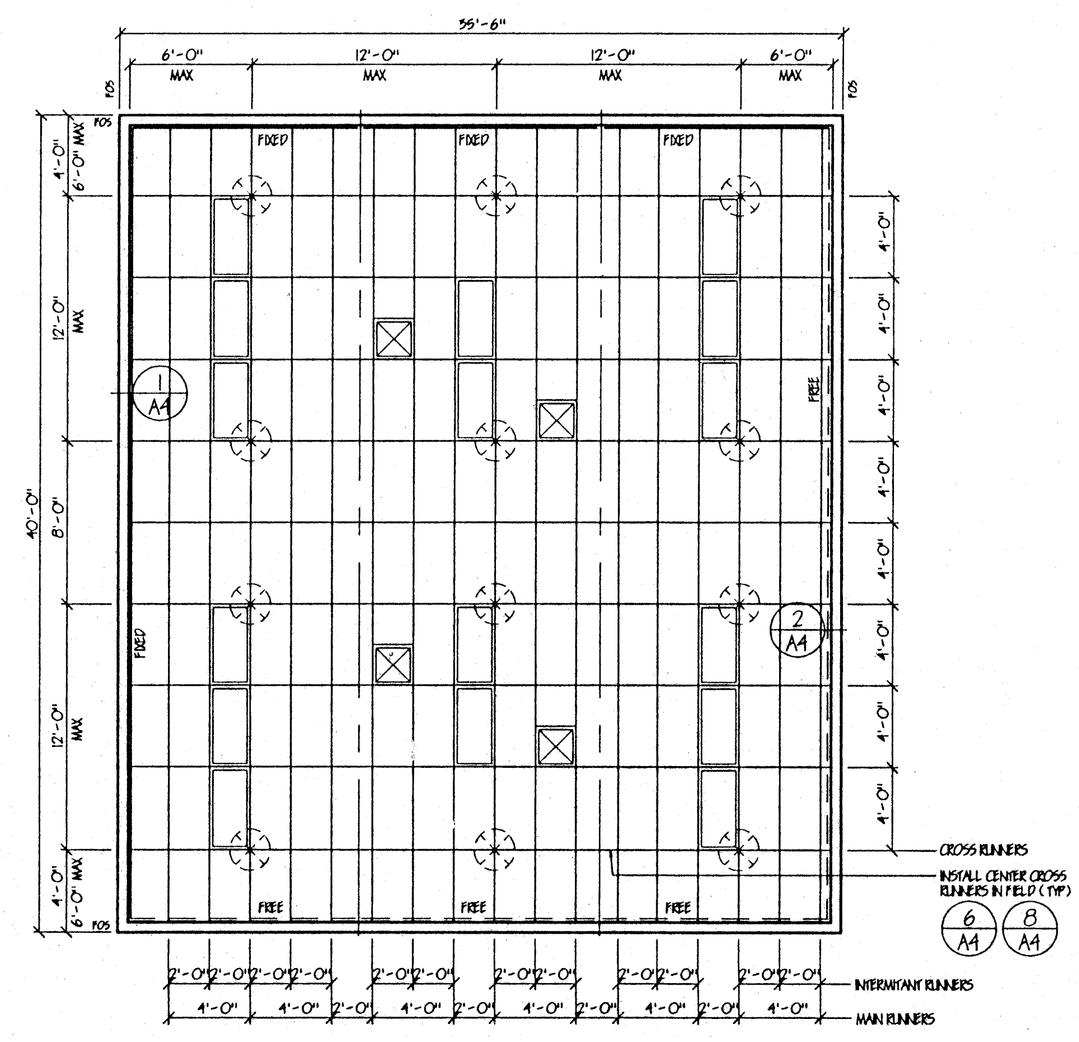

36 X 40 REFLECTED CEILING PLAN

SCALE: 3/16"=1'-0"

(REVERSE SIMILAR)

GENERAL NOTES

MAIN RUNNERS AT 4'-0" ON CENTER WITH 12GA HANGER WIRES AT END OF EACH RUNNER.

AT END OF ROWS OF RUNNERS A 12GA HANGER WIRE SHALL BE ATTACHED WITHIN 8' OF WALL, OR 1/4 LENGTH OF END TEE.

VERTICAL WIRES MORE THAN 1 IN 6 OUT OF PLUMB SHALL HAVE COUNTER BRACING WIRES.

PROVIDE 2-12GA SLACK WIRES TO HOUSING OF ALL LIGHT FIXTURES AT DIAGONAL CORNERS. WIRES SHALL BE ATTACHED TO STRUCTURE. ATTACH WIRES TO LIGHT FIXTURES WITH #8 SHEET METAL SCREW AT EACH CORNER.

RUNNERS MAY BE ATTACHED TO WALLS AT ONLY TWO ADJACENT WALLS. ALL OTHER CONDITIONS MUST PROVIDE A CLEARANCE OF 1/2" BETWEEN END OF RUNNERS AND FACE OF WALL.

CEILING AREAS SHALL HAVE 4-WAY SPLAYS AT LOCATIONS INDICATED. WIRES TO BE TAUT, BUT NO DISTORTION OF GRID.

ALL FINISHES SHALL COMPLY WITH CBC CHAPTERS 5, 6, 7, 8, AND 10

DUCTWORK SHALL BE RIGIDLY ATTACHED TO BUILDING AND SHALL NOT BE CLOSER THAN 6" TO HANGER WIRES.

REGISTERS SHALL BE POSITIVELY ATTACHED WITH 4-10GA SHEET METAL SCREWS TO GRID.

CEILING PANELS: 2'x4' LAY-IN PANELS, ASTM FLAME SPREAD CLASS I (0-25). FLAME SPREAD SMOKE DEVELOPMENT DENSITY LESS THAN 450.

MAIN RUNNERS: ARMSTRONG PRELUDE XL, 7304 HD, OR EQUAL.

INTERMEDIANT RUNNERS: ARMSTRONG PRELUDE XL, XL-7342, OR EQUAL.

CROSS RUNNERS: ARMSTRONG PRELUDE XL, XL-7328, OR EQUAL.

WALL ANGLES: FSC 8000/8501, CSPT 8000/8501, OR EQUAL.

ABBREVIATIONS:

AFF	ABOVE FINISH FLOOR
AL OR ALUM	ALUMINUM
ALT	ALTERNATE
CONN	CONNECTION
GA	GAUGE
HM	HOLLOW METAL
MAX.	MAXIMUM
MIN.	MINIMUM
NO.	NUMBER
NR	NOT RATED
OVHG	OVERHANG
PR	PAIR
SMS	SHEET METAL SCREW

LEGEND

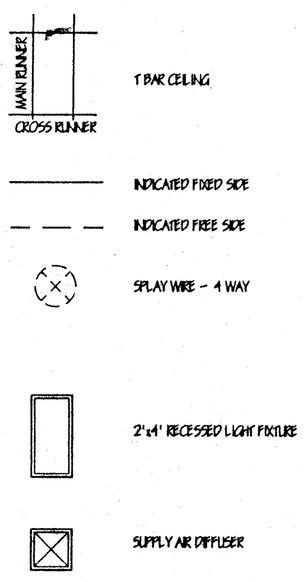

APPROVALS

IDENTIFICATION STAMP
DIV. OF THE STATE ARCHITECT

APPROVED

DATE

IDENTIFICATION STAMP
DIV. OF THE STATE ARCHITECT
OFFICE OF REGULATION SERVICES

PC 374

AD. F.L.B.

DATE 10-24-97

NORMAN A. GEIGER
AIA, CSI, CDT, ICBO
P.O. BOX 41054
Sacramento, CA 95841
(916) 332-2453 FAX
(916) 332-2453 PHONE

GRAFICS ARCHITECTURAL SERVICES
GEIGER

PACESETTER INDUSTRIES, INC.
P.O. BOX 1151, MODESTO, CA 95353 (209) 521-1600

36x40 RELOCATABLE BUILDING

SHEET CONTENTS:
REFLECTED CEILING PLAN
GENERAL NOTES
LEGEND
DETAILS

DATE:	AUGUST 28, 1997
DRAWING SCALE:	AS SHOWN
PROJECT NUMBER:	97-06
SHEET	A4
OF	