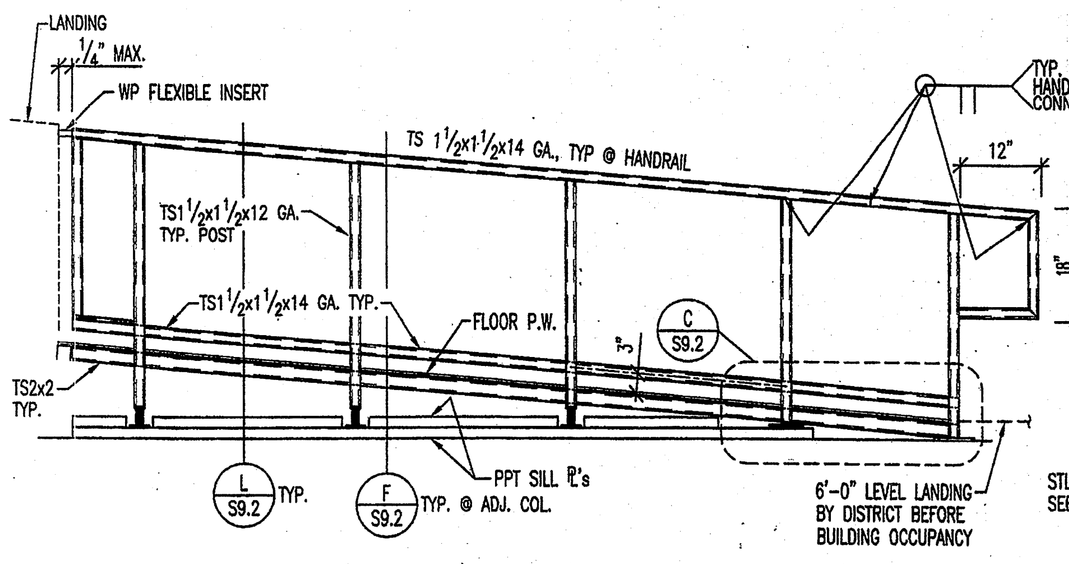

A S9.2 RAMP ELEVATION
SCALE: 3/4" = 1'-0"

NOTE: CLOSE ALL OPEN ENDS OF TS MEMBERS w/ 12 GA. CLOSURE PL & SEAL WELD ALL AROUND OR EQUIVALENT PLASTIC WATERPROOFING INSERT - TYPICAL @ ALL LOCATIONS @ RAMP & LANDING

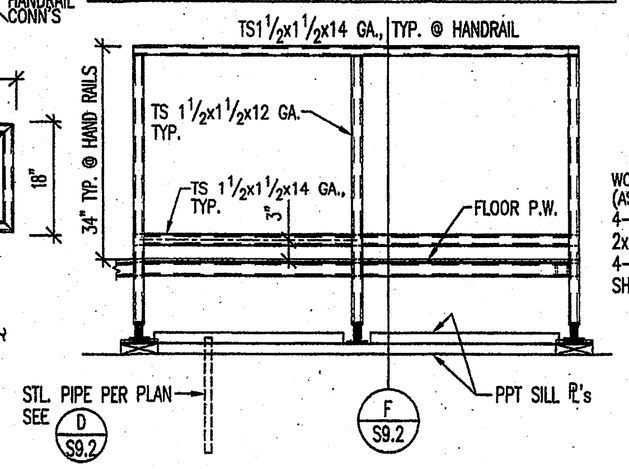

B S9.2 LANDING ELEVATION
SCALE: 3/4" = 1'-0"

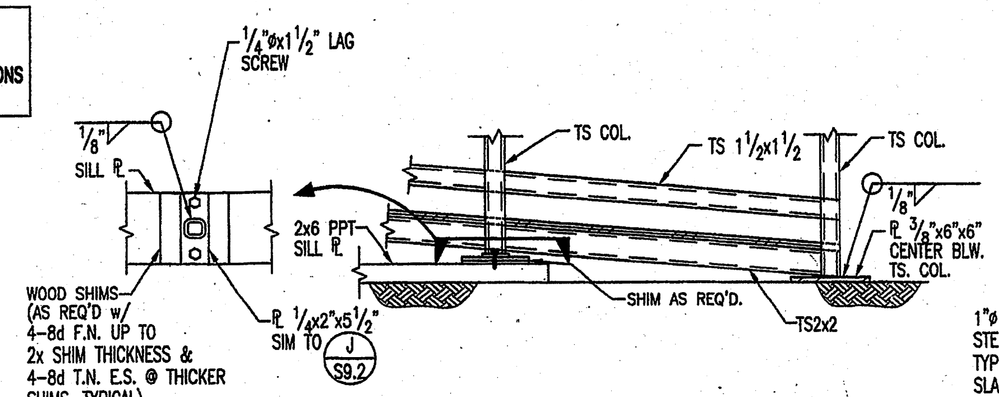

C S9.2 DETAIL - PARTIAL RAMP ELEVATION
SCALE: 1 1/2" = 1'-0"

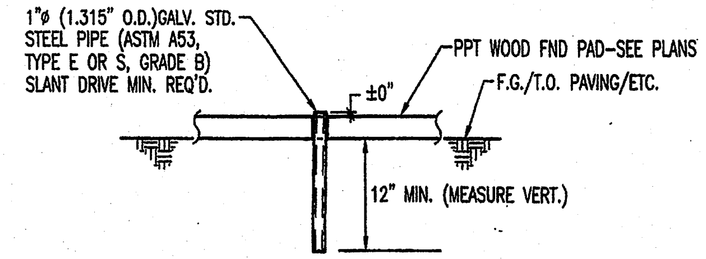

D S9.2 TYPICAL PIPE RESTRAINT DETAIL
N.T.S. (SEE PLANS ABOVE FOR LOCATIONS)

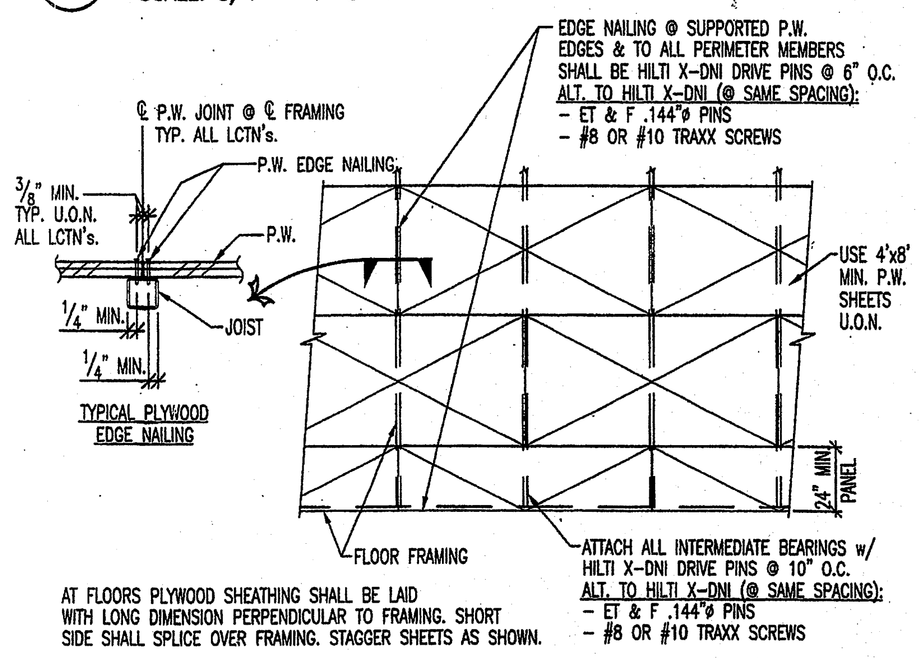

E S9.2 TYP. P.W. FLOOR SHEATHING DETAIL
N.T.S.

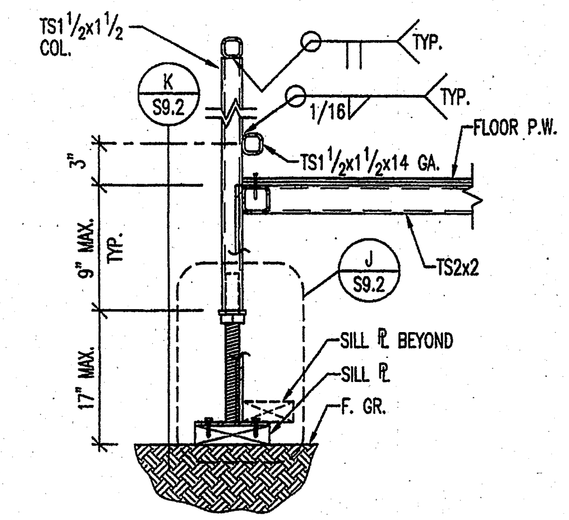

F S9.2 DETAIL - TYP. POST CONNECTION
SCALE: 1 1/2" = 1'-0"

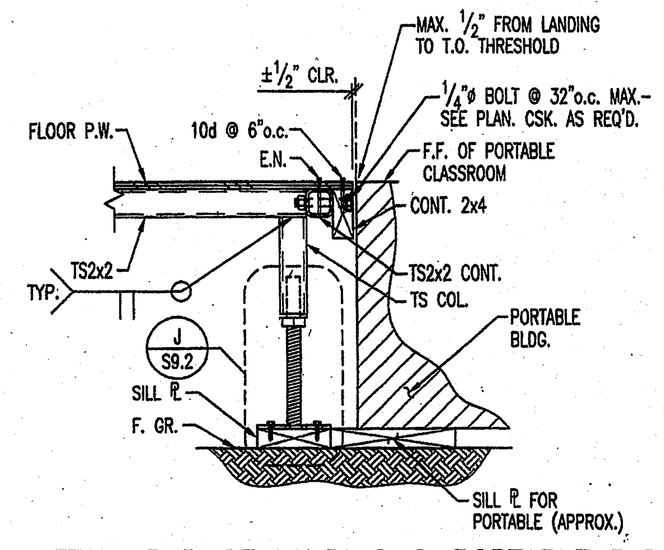

G S9.2 DETAIL-END OF LANDING @ PORTABLE BLDG.
SCALE: 1 1/2" = 1'-0"

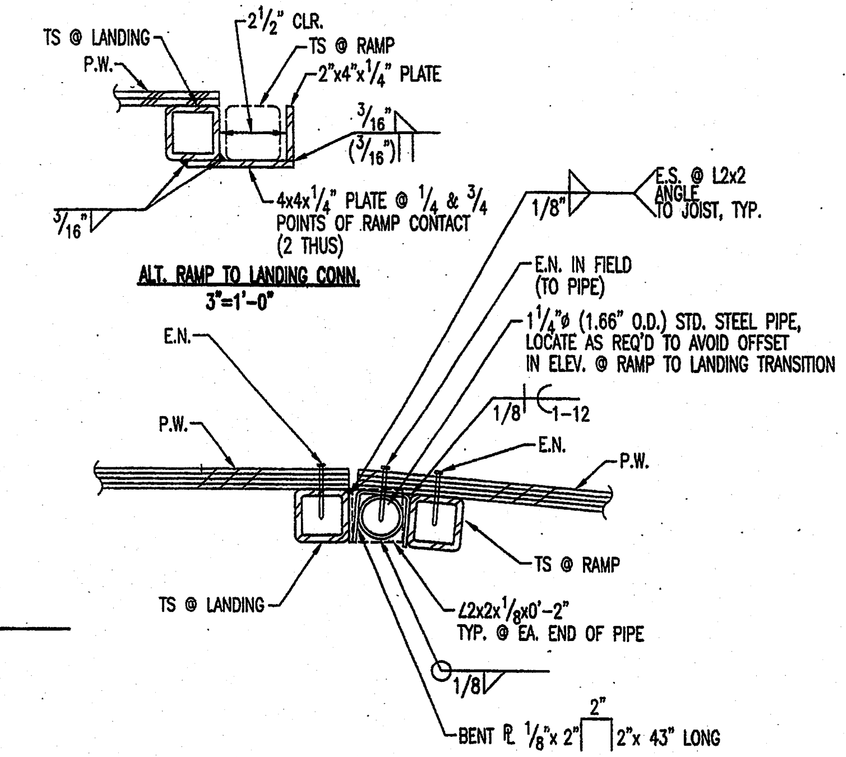

H S9.2 DETAIL-RAMP TO LANDING CONNECTION
SCALE: 3" = 1'-0"

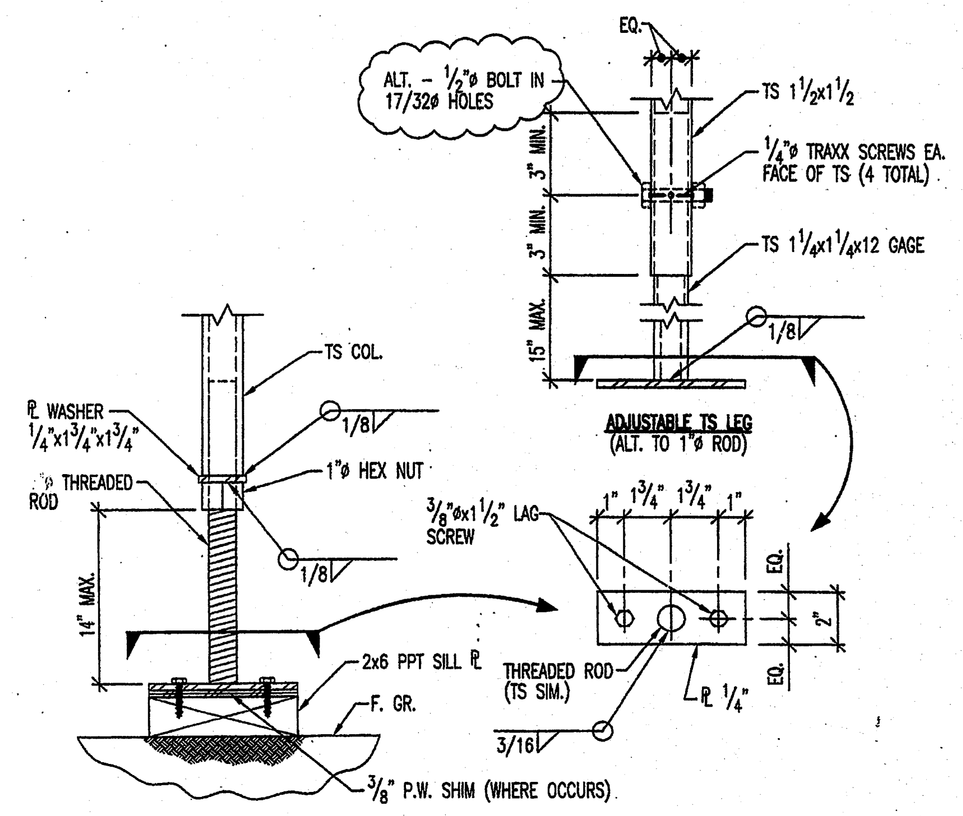

J S9.2 DETAIL-ADJUSTABLE LEG @ BASE
SCALE: 3" = 1'-0"

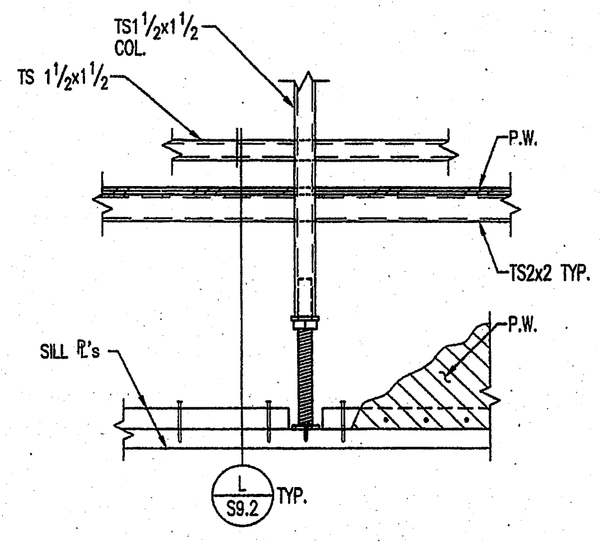

K S9.2 DETAIL - POST CONN. @ BASE
SCALE: 1 1/2" = 1'-0"

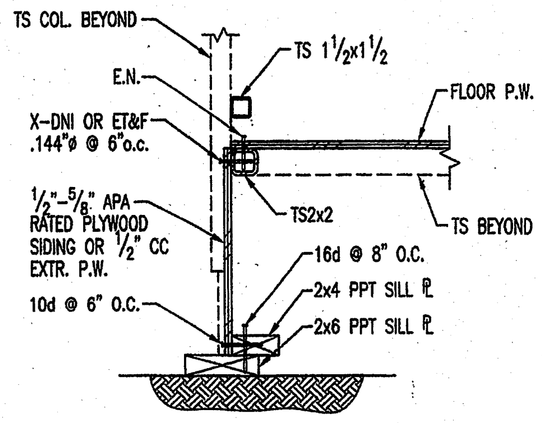

L S9.2 DETAIL - TYP. SIDE OF RAMP/LANDING
SCALE: 1 1/2" = 1'-0"

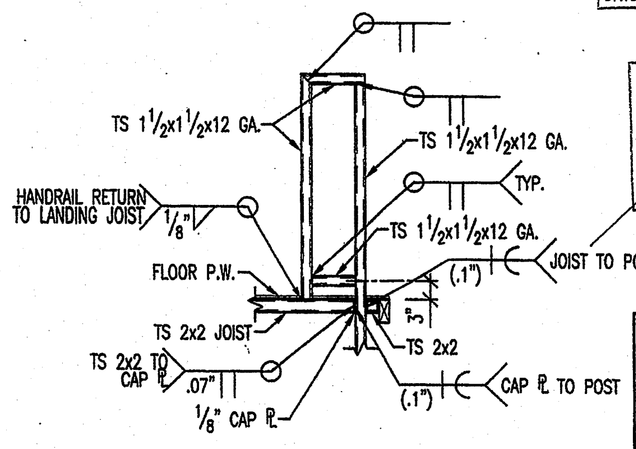

M S9.2 LANDING HANDRAIL @ RAMP
SCALE: 3/4" = 1'-0"

IDENTIFICATION STAMP
DIV. OF THE STATE ARCHITECT
OFFICE OF REGULATION SERVICES
02 100898
AC FL8 SS
DATE 11/10/98

IDENTIFICATION STAMP
DIV. OF THE STATE ARCHITECT
OFFICE OF REGULATION SERVICES
02 100845
AC FLS SS
DATE NOV 25 1998

IDENTIFICATION STAMP
DIV. OF THE STATE ARCHITECT
OFFICE OF REGULATION SERVICES
PC-330
AC: FLS: SS:
DATE:

REVISIONS	BY
1 12-17-97/SUBSTITUTED	BD
S9.1 & S9.2 FROM PC-335	

PACESETTER INDUSTRIES, INC.
2507 HERITAGE DRIVE, BLDG. NO. 1230, ATWATER, CA 95301 TEL: (209) 725-1600 FAX: (209) 381-7833

RAMP & LANDING @ PORTABLE CLASSROOMS

ELEVATIONS & DETAILS

REGISTERED PROFESSIONAL ENGINEER BRUCE D. DOIG No. 2522 STRUCTURAL STATE OF CALIFORNIA

EXPIRES 3-31-00

ANDERSON & DOIG
STRUCTURAL ENGINEERS
A CALIFORNIA CORPORATION
10308 PLACER LANE, STE. 100, SACRAMENTO, CA 95827-2511
(916) 366-8622 FAX: (916) 366-8623

DRAWN	MM
CHECKED	BD/KE
DATE	12-17-97
SCALE	AS NOTED
JOB NO.	97007 PSPC1
SHEET	S9.2

PROJECTS\PROJ_97\97007_PSPC1\S9-2.dwg Wed Nov 11 12:19:33 1998