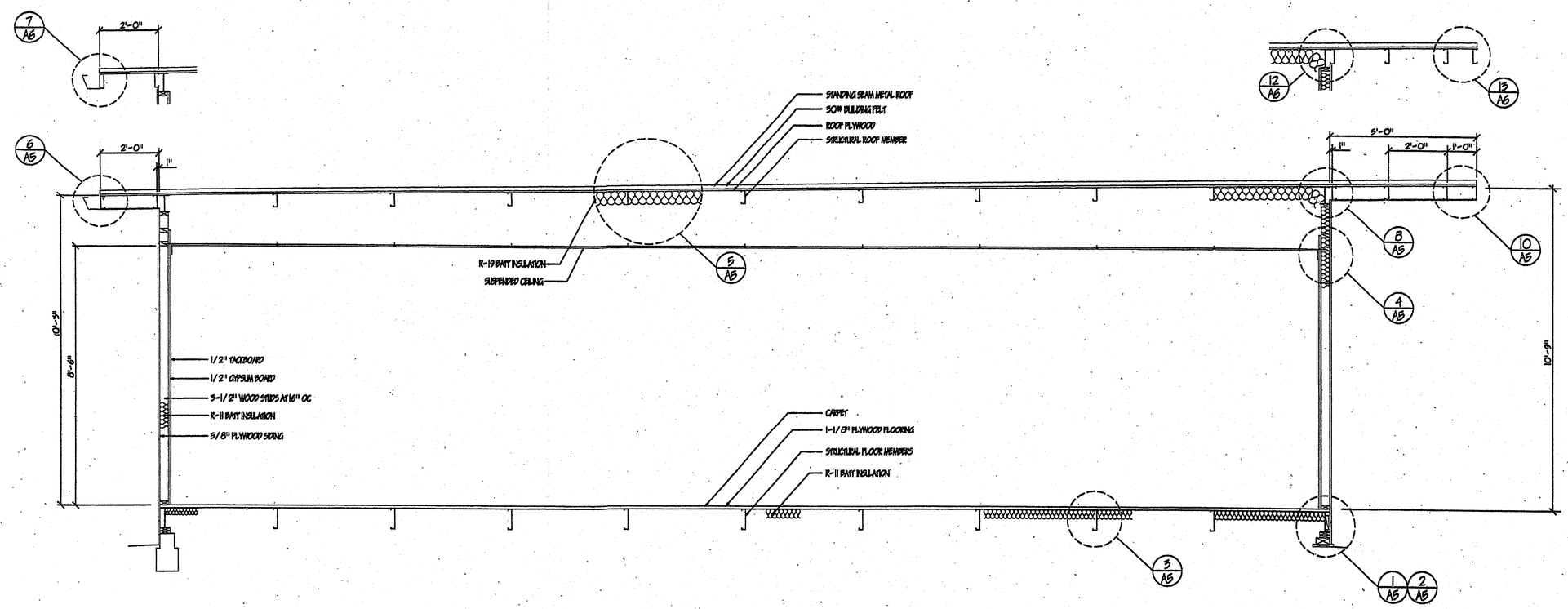

24'x40' CROSS SECTION A-A

SCALE: 1/2"=1'-0"

GENERAL NOTES

ALL FINISHES SHALL COMPLY WITH CBC CHAPTERS 5, 6, 7, 8, AND 10

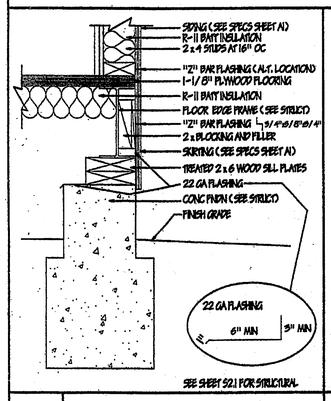

2 CONC FNDN SCALE: 1-1/2"=1'-0"

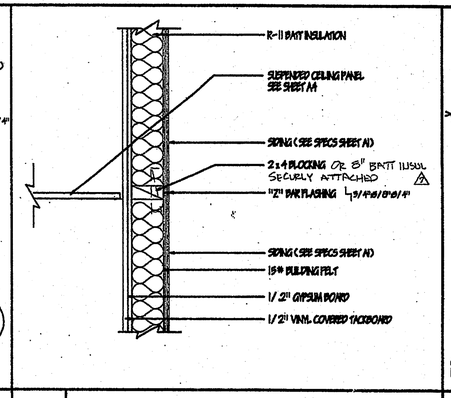

4 "Z" BAR FLASHING SCALE: 1-1/2"=1'-0"

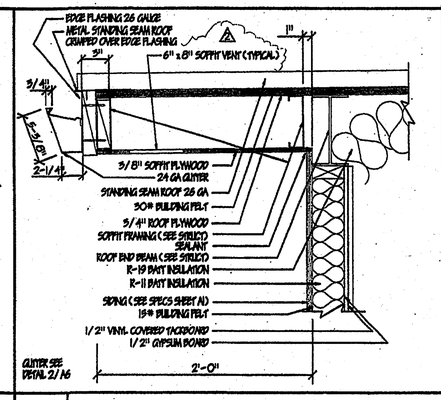

6 REAR SOFFIT OVERHANG SCALE: 1-1/2"=1'-0"

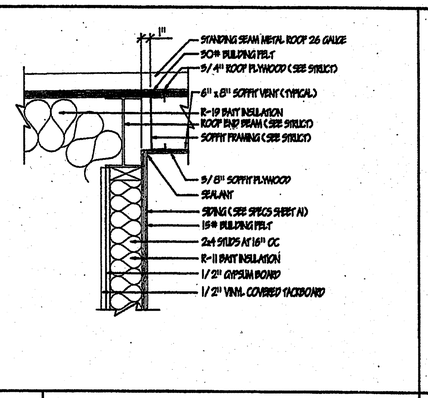

8 ENTRY SOFFIT OVERHANG SCALE: 1-1/2"=1'-0"

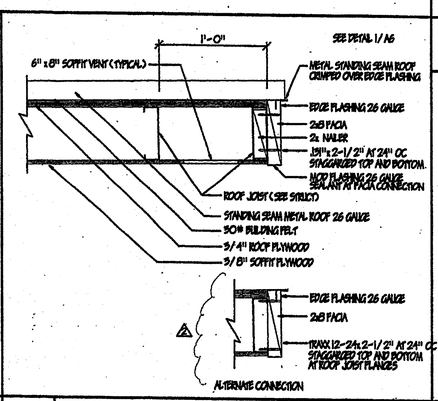

10 ENTRY SOFFIT OVERHANG SCALE: 1-1/2"=1'-0"

LEGEND

- BATT INSULATION
- WOOD MEMBER
- BLOCKING
- GYPSUM BOARD
- PLYWOOD

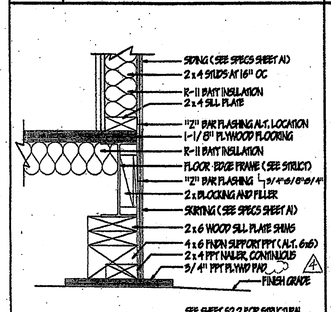

1 WOOD FNDN SCALE: 1-1/2"=1'-0"

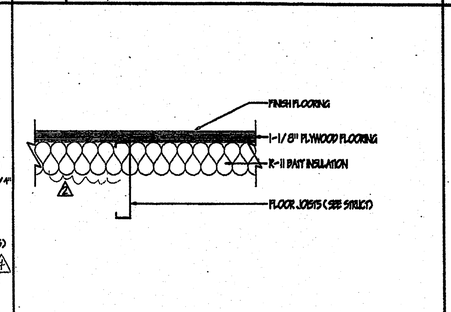

3 FLOOR SCALE: 1-1/2"=1'-0"

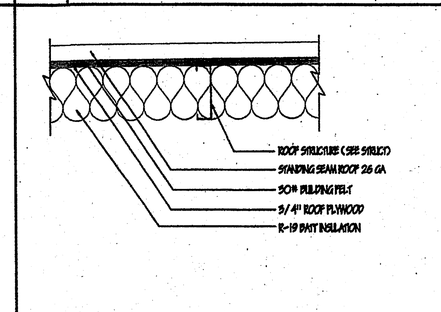

5 DETAIL SCALE: 1-1/2"=1'-0"

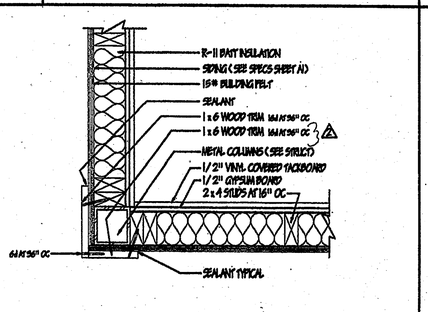

7 CORNER SCALE: 1-1/2"=1'-0"

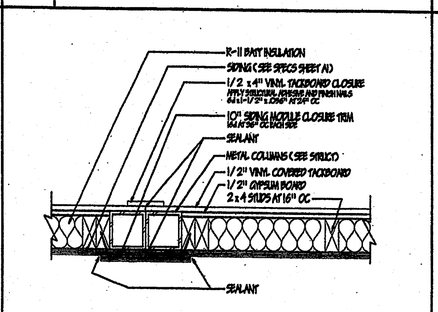

9 MOD CONNECTION

APPROVALS

IDENTIFICATION STAMP
DIV. OF THE STATE ARCHITECT
OFFICE OF REGULATION SERVICES
02 100893
AC FLS DC SS
DATE 12/10/98

IDENTIFICATION STAMP
DIV. OF THE STATE ARCHITECT
OFFICE OF REGULATION SERVICES
02 100845
AC FLS SS
DATE NOV 25 1998

IDENTIFICATION STAMP
DIV. OF THE STATE ARCHITECT
OFFICE OF REGULATION SERVICES
02 100537
AC FLS SS
DATE

IDENTIFICATION STAMP
DIV. OF THE STATE ARCHITECT
OFFICE OF REGULATION SERVICES
PC 330
AC FLS
DATE

ABBREVIATIONS:

AFF	ABOVE FINISH FLOOR
ALT.	ALTERNATE
AL. OR ALUM	ALUMINUM
FNDN	FOUNDATION
HM	HOLLOW METAL
MIN.	MINIMUM
MAX.	MAXIMUM
NO.	NUMBER
NS	NOT SIZED
OVHG	OVERHANG
PPT	PRESSURE TREATED
PK	PANE
STRUCT	STRUCTURAL

LICENSED ARCHITECT
JOSEPH H. KASPER
C-17820
EXPIRATION DATE 12-31-97
STATE OF CALIFORNIA

PACESETTER INDUSTRIES, INC.

P.O. BOX 1131, MODESTO, CA 95353 (209) 521-1600

24x40 RELOCATABLE BUILDING

SHEET CONTENTS:
GENERAL NOTES
KEYNOTES
BUILDING SECTION
DETAILS

DATE:		APRIL 23, 1997
REV. #1	1	MAY 15, 1997
REV. #2	2	JUNE 20, 1997
REV. #3	3	AUGUST 1, 1997
REV. #4	4	AUGUST 26, 1997
REV #7	7	12-17-97
DRAWING SCALE:		AS SHOWN
PROJECT NUMBER:		97-03
SHEET		A5