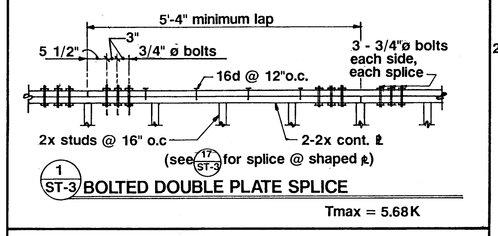

1/ST-3 BOLTED DOUBLE PLATE SPLICE

Tmax = 5.68K

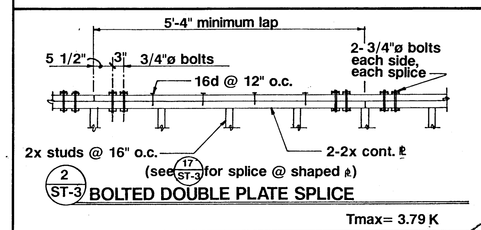

2/ST-3 BOLTED DOUBLE PLATE SPLICE

Tmax= 3.79 K

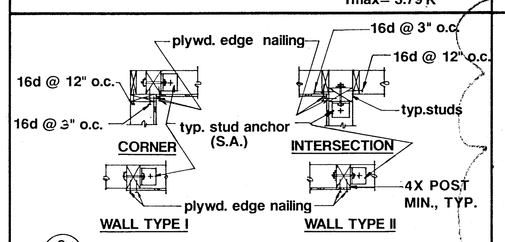

3/ST-3 STUD ANCHOR LAYOUT PLANS @ 4X OR 2-2X

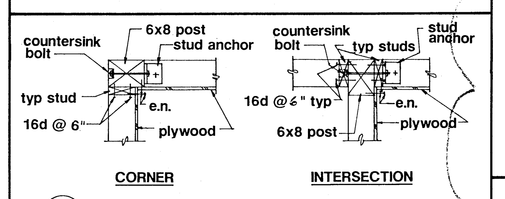

4/ST-3 STUD ANCHOR LAYOUT PLANS @ 6X

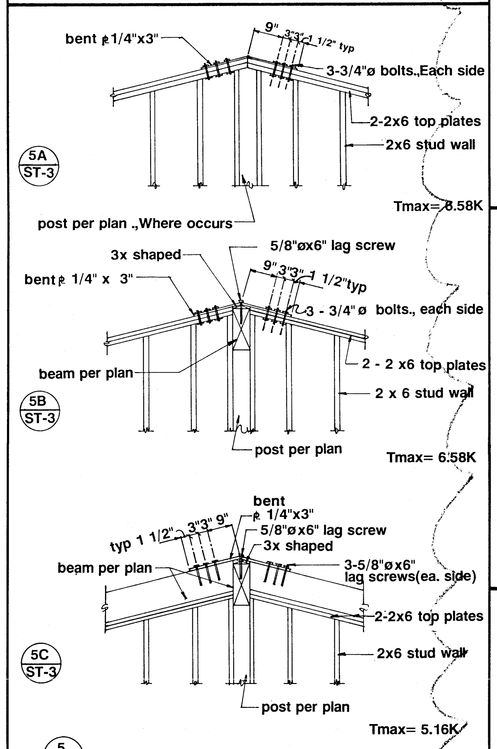

5/ST-3 CHORD SPLICES @ ROOF RIDGE

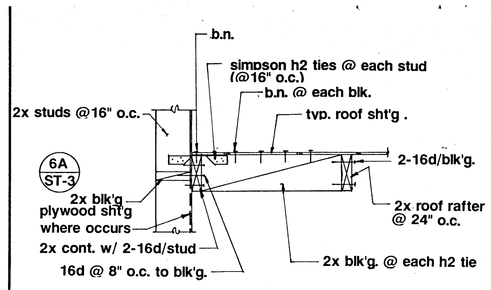

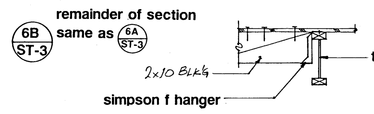

6/ST-3 CONNECTION OF DIAPHRAGM TO WALL W/ PARAPET

7/ST-3 **NOT USED**

8/ST-3 **NOT USED**

9/ST-3 **NOT USED**

10/ST-3 **NOT USED**

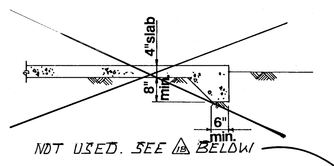

11/ST-3 TYP TURN DOWN @ EXTERIOR SLAB EDGE

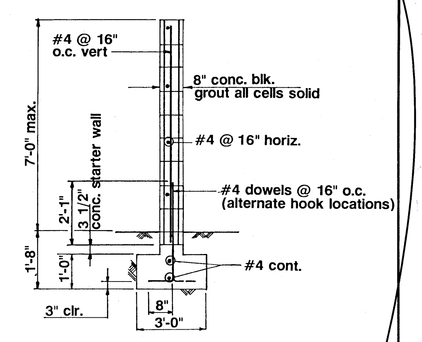

12/ST-3 TYP GARDEN WALL

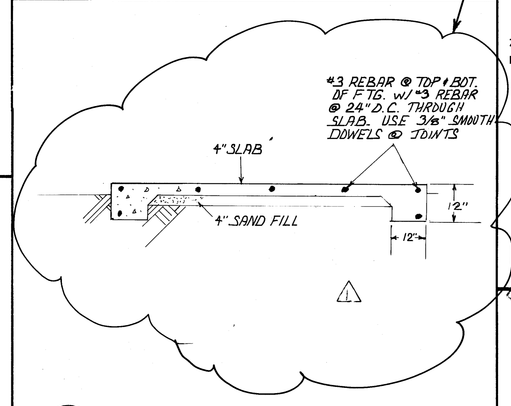

13/ST-3 **NOT USED**

14/ST-3 **NOT USED**

Following stripping operations:

The dark brown silty sand, which is at the surface to a depth of 1 to 2 feet, shall be removed from the building pad areas. This soil shall not be used as engineered fill in the building pads.

The top five feet from finish sub-grade of native reddish-brown soil in the building pad areas extending five feet outside the building perimeters shall be excavated. The bottom six inches shall be ripped and moistened with water to within optimum or above optimum moisture content and compacted to a minimum of 90% relative compaction.

(Reference: Geotechnical Report by Kern Testing and Inspection Corporation, 11-18-92, p. 7)

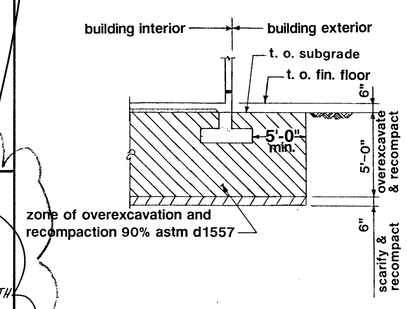

15/ST-3 TYP DETAIL FOR EXCAVATION AND RECOMPACTION

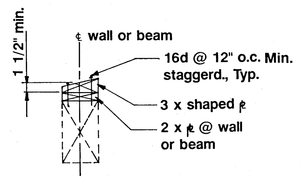

16/ST-3 TYP 3X SHAPED TOP PLATE

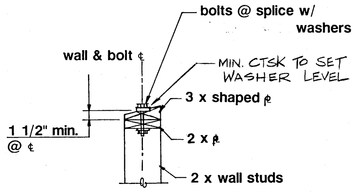

17/ST-3 TYP SPLICE @ 3X SHAPED TOP PLATE

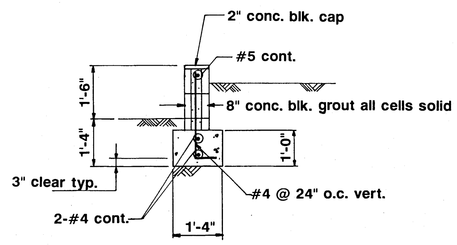

18/ST-3 TYP PLANTER WALL

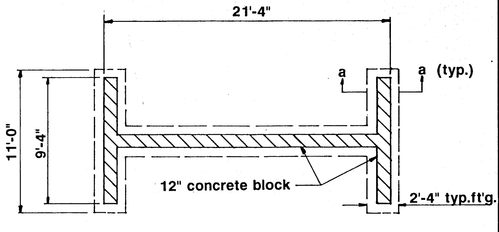

PLAN

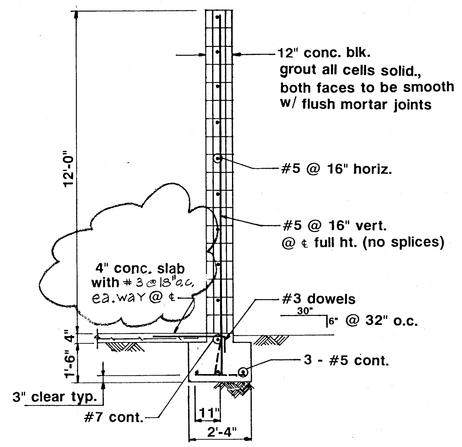

SECTION A-A

19/ST-3 TYP. BALL WALL

20/ST-3 **NOT USED**

KLASSEN CORPORATION
Architecture
Planning
Construction
2021 Westwind Drive
Bakersfield, CA 93301
(805) 327-0875
(805) 327-5933 Fax

REGISTERED ARCHITECT L. PHIL KLASSEN Exp. 12-31-94 C-10,481 STATE OF CALIFORNIA

The above drawings and specifications and ideas, designs and arrangements represented thereby are and shall remain the property of the architect and no part thereof shall be copied, disclosed to others or used in connection with any work or project other than the specific project for which they have been prepared and developed without the written consent of the architect. Visual contact with these drawings or specifications shall constitute conclusive evidence of acceptance of these restrictions.

Written dimensions on these drawings shall have precedence over scaled dimension. contractors shall verify and be responsible for all dimensions and conditions on the job and this office must be notified of any variations from the dimensions and conditions shown by these drawings. Shop details must be submitted to this office for approval before proceeding with fabrication.

BAKERSFIELD CITY SCHOOL DISTRICT
MESA MARIN ELEMENTARY SCHOOL
JEWETT STREET BAKERSFIELD, CALIFORNIA

Sheet title: STANDARD DETAILS

WARREN A. MINNER
STRUCTURAL ENGINEER
1716 OAK STREET
BAKERSFIELD, CALIFORNIA 93301
PHONE (805) 324-9724
FAX (805) 324-3416

Date:	Issued for:

Date:	Revisions:
7-2-93	ADD #4, Item 2
5-24-94	INSTR. BUL. 030
10.94	RC BUILTS

Drawn by: R J. H
Checked by: R C. S
Job no: 1921

Sheet: ST-3
Sheet of:

Date: 3-8-93

REGISTERED PROFESSIONAL ENGINEER WARREN A. MINNER No. 863 STRUCTURAL STATE OF CALIFORNIA
Exp. Date 12-31-96