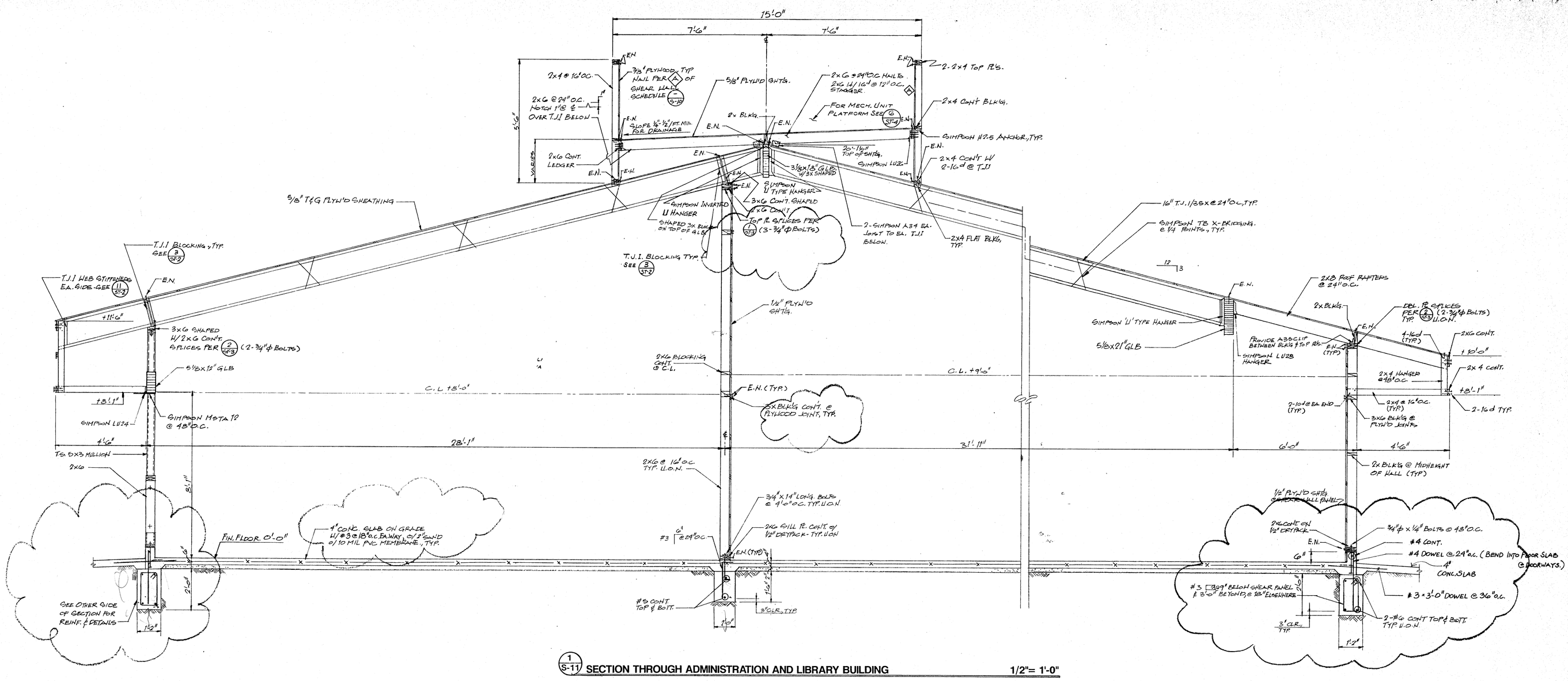

1 S-11 SECTION THROUGH ADMINISTRATION AND LIBRARY BUILDING 1/2"= 1'-0"

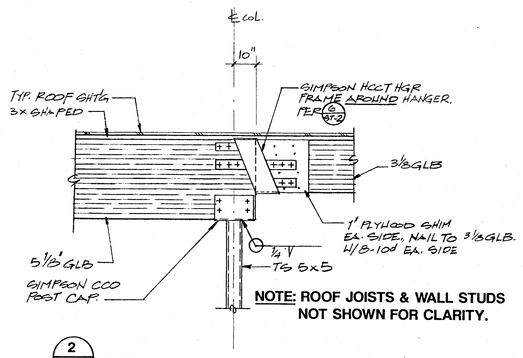

2 S-11 SECTION 1/2"= 1'-0"

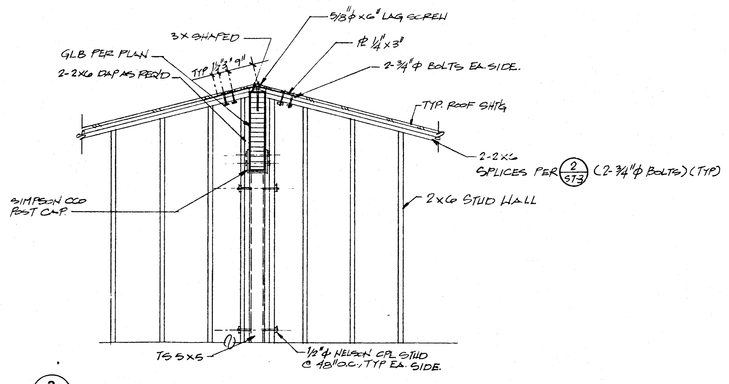

3 S-11 SECTION 1/2"= 1'-0"

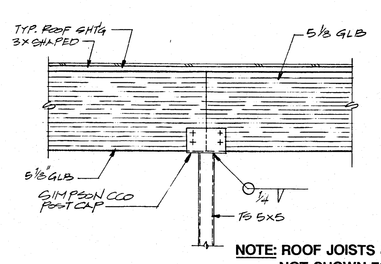

4 S-11 SECTION 1/2"= 1'-0"

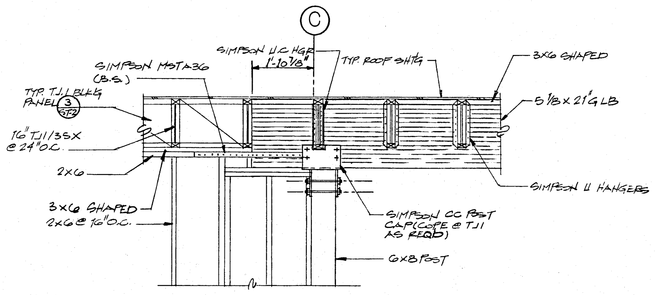

5 S-11 SECTION 1/2"= 1'-0"

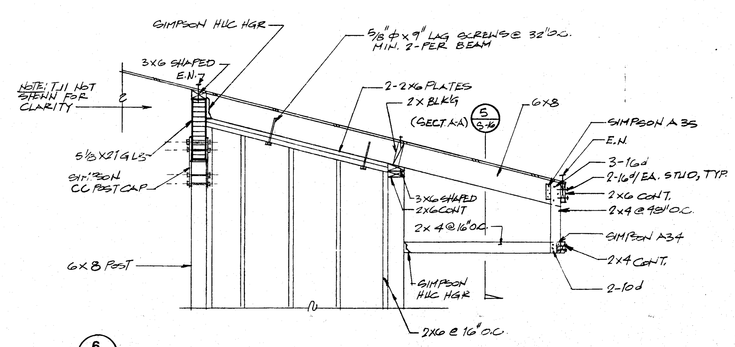

6 S-11 SECTION 1/2"= 1'-0"

KLASSEN CORPORATION
Architecture
Planning
Construction
2021 Westwind Drive
Bakersfield, CA 93301
(805) 327-0875
(805) 327-5933 Fax

REGISTERED ARCHITECT — STATE OF CALIFORNIA — Exp. 1-31-93

The drawings and specifications, including ideas, designs and arrangements represented thereby are and shall remain the property of the architect and no part thereof shall be copied, disclosed to others or used in connection with any work or project other than the specific project for which they have been prepared and developed without the written consent of the architect. Visual contact with these drawings or specifications shall constitute conclusive evidence of acceptance of these restrictions.
Written dimensions on these drawings shall have precedence over scaled dimension; contractors shall verify and be responsible for all dimensions and conditions on the job and this office must be notified of any variations from the dimensions and conditions shown by these drawings. Shop details must be submitted to this office for approval before proceeding with fabrication.

BAKERSFIELD CITY SCHOOL DISTRICT
MESA MARIN ELEMENTARY SCHOOL
JEWETT STREET BAKERSFIELD, CALIFORNIA

Sheet title: ADMINISTRATION & LIBRARY BUILDING SECTIONS & DETAILS

WARREN A. MINNER
STRUCTURAL ENGINEER
1716 OAK STREET
BAKERSFIELD, CALIFORNIA 93301
PHONE (805) 324-9724
FAX (805) 324-3416

Date:	Issued for:

Date:	Revisions:
7-2-93	ADD #4, Item 2
10-94	R.F. BUILT'S

Drawn by: R. J. H
Checked by: R. C. S
Job no: 1921
Sheet: S-11
Sheet of:
Date: 3-8-93

REGISTERED PROFESSIONAL ENGINEER — WARREN A. MINNER — No 863 — STRUCTURAL — STATE OF CALIFORNIA
Exp. Date 12-31-96