LANDSCAPE DETAILS

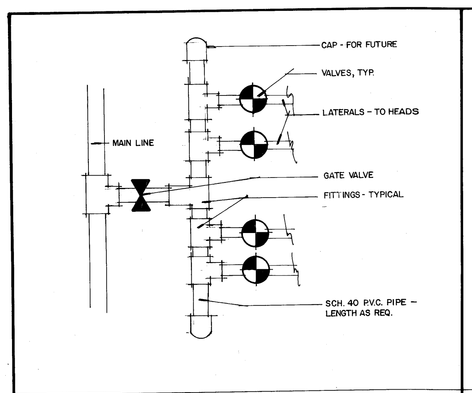

TYP. IRRIGATION MANIFOLD ASSEMBLY

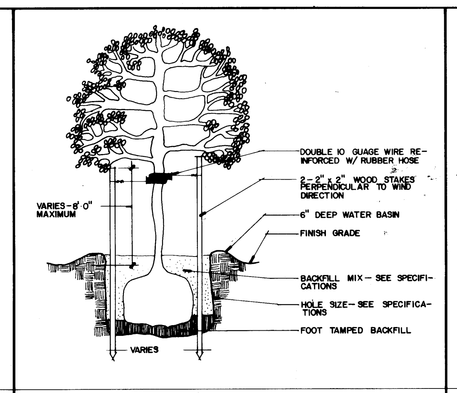

TREE STAKING / PLANTING DETAIL

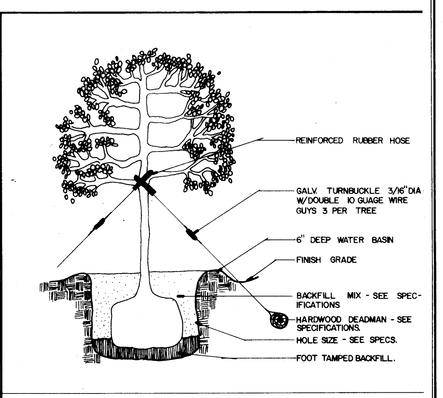

TREE GUYING / PLANTING DETAIL

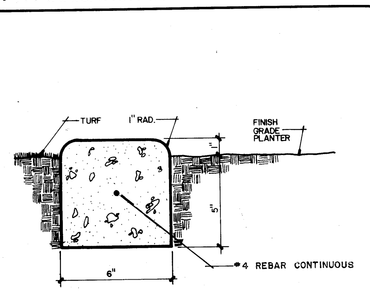

CONCRETE MOWSTRIP

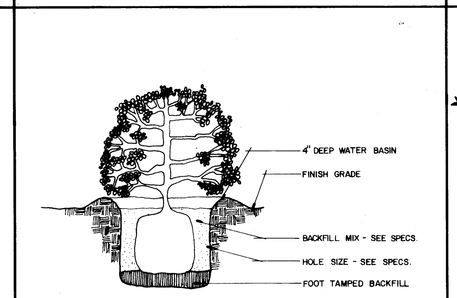

SHRUB PLANTING DETAIL

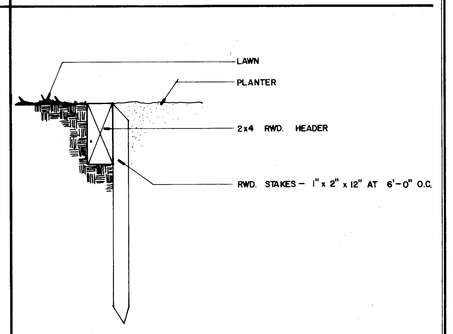

HEADER DETAIL

LANDSCAPE SCHEDULE

PLANT SYMBOL / QUANTITY / SIZE CONTAINER

SYM	SIZE	BOTANICAL NAME	COMMON NAME
		TREES	
CCC	15G	CINNAMOMUM CAMPHORA	CAMPHOR TREE
GLM	15G, 24"	GINKGO BILOBA	MAIDENHAIR TREE
LIC	15G, 24"	LAGERSTROEMIA INDICA 'BURBA'	CRAPE MYRTLE
PCA	15G.	PRUNUS CERASIFERA 'ATROPURPUREA'	FLOWERING PLUM
PCC	15G.	PISTACIA CHINENSIS	CHINESE ELM
PCD	15G	PYRUS CALLERYANA 'ARISTOCRAT'	ORNAMENTAL PEAR
PPP	15G, 24"	PLATANUS RACEMOSA 'BLOODGOOD'	CALIFORNIA SYCAMORE
SEC	15G.	SEQUOIA SEMPERVIRENS	COAST REDWOOD
		SHRUBS	
AD	5G.	AGAPANTHUS 'PETER PAN'	DWARF LILY OF THE NILE
MI	5G.	MORAEA IRIDIOIDES	FORTNIGHT LILY
PG	5G	PHOTINIA GLABRA	JAPANESE PHOTINIA
PB	5G	RAPHIOLEPIS INDICA 'BALLERINA'	INDIA HAWTHORN
RC	5G	RAPHIOLEPIS INDICA 'COATES CRIMSON'	INDIA HAWTHORN
RJ	5G	RAPHIOLEPIS INDICA 'J. EVENS'	INDIA HAWTHORN
		GROUND COVERS	
	FLT3	HYPERICUM CALYCINUM	AARON'S BEARD 8" o/c
	FLT3	VINCA MINOR	DWARF PERIWINKLE 6" o/c
		TURF	
		COMMON BERMUDA HYDROSEEDED - SEE SPECIFICATIONS	

LANDSCAPE NOTES:

1. THERE SHALL BE NO DELETIONS OR SUBSTITUTIONS WITHOUT THE APPROVAL OF THE LANDSCAPE ARCHITECT.
2. INSTALL ALL MATERIAL AS CALLED OUT IN DETAILS AND AS PER SPECIFICATIONS.
3. GROUNDCOVERS TO EXTEND UNDER AND AROUND ALL SHRUBS AND SHALL BE TRIANGULAR SPACED.
4. ALL TREES IN TURF AREAS TO RECEIVE TRUNK GUARDS BY 'ARBOR GARD' AS MANUFACTURED BY DEEP ROOT CORP., WESTMINSTER, CA 92683, (714) 848-0563. INSTALL AS PER MANUFACTURERS SPECIFICATIONS. AN APPROVED EQUAL MAY BE SUBSTITUTED.
5. RELOCATE PLANT MATERIALS TO ACCOMODATE LIGHT STANDARDS IN PLANTERS IF NECESSARY. LANDSCAPE ARCHITECT TO HAVE FINAL APPROVAL.
6. R.B.- INDICATES TREES TO HAVE 'DEEP ROOT' CONTROL BARRIERS. BARRIERS TO BE 24" AS MANUFACTURED BY DEEP ROOT CORP., WESTMINSTER, CA 92683, (714) 898-0568, OR AN APPROVED EQUAL. INSTALL AS PER MANUFACTURERS SPECIFICATIONS.
7. ALL GROUNDCOVERS ON SLOPED AREAS SHALL RECEIVE A LAYER OF JUTE MESH. SECURE WITH METAL PINS OR AS PER MANUFACTURERS RECOMMENDATIONS. MATERIAL SHALL BE GEOJUTE BY BELTON INDUSTRIES, INC., (800) 225-4099, OR AN APPROVED EQUAL.
8. FIRE LANE PAVING SHALL BE 'TURF-BLOCK' PAVERS AS MANUFACTURED BY ACKER-STONE, (800) 258-2353. VERIFY WITH MANUFACTURER FOR INSTALLATION REQUIREMENTS. SEE DETAIL 1, THIS SHEET.
9. ALL PLANTER BEDS NOT HAVING GROUND COVERS SHALL RECEIVE A 2" LAYER OF WALK-ON SHREDDED BARK. EXTEND UNDER ALL PLANTS.

REGISTERED LANDSCAPE ARCHITECT
RALPH ADAME
No. 2000
SIGNATURE
DATE
STATE OF CALIFORNIA

IRRIGATION DETAILS

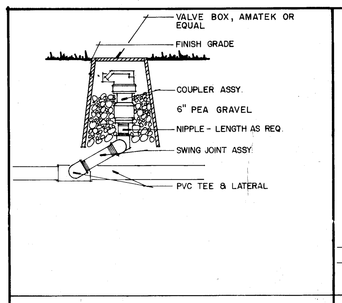

QUICK COUPLER

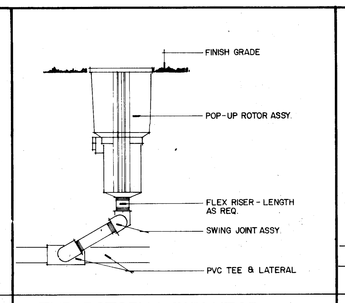

TYP. ROTORY LAWN HEAD

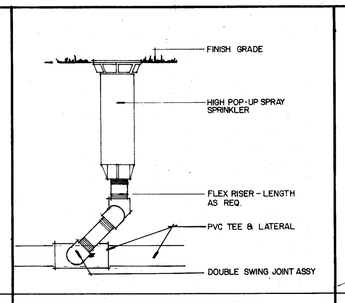

TYP. POP-UP SHRUB HEAD

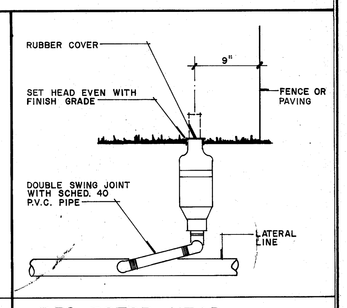

R70 ROTOR HEAD

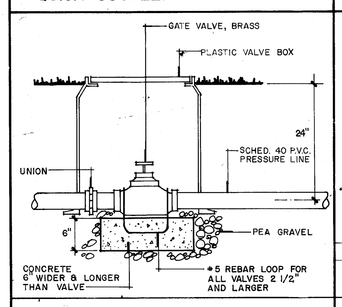

GATE VALVE

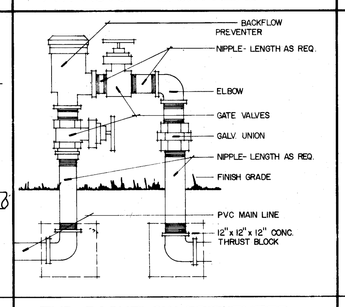

TYP. BACKFLOW PREVENTER

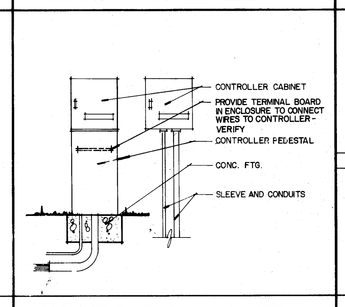

CONTROLLER : WALL & PED.

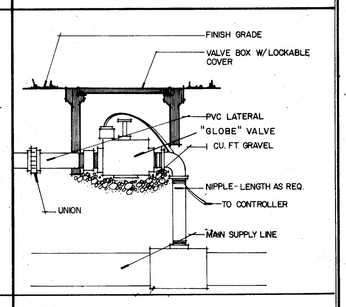

REMOTE CONTROL VALVE

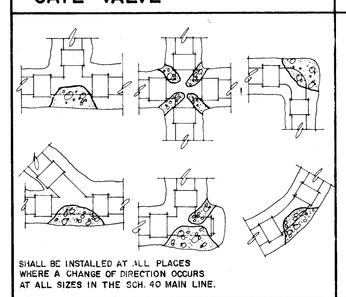

THRUST BLOCK

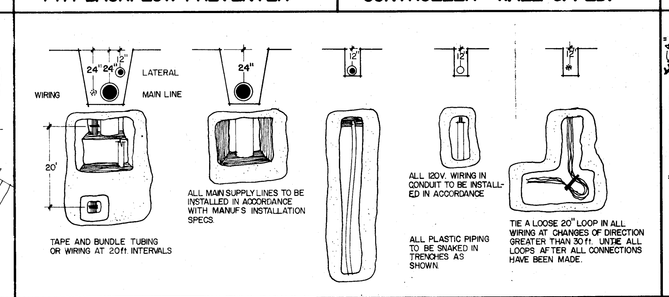

TYP. TRENCHING DETAILS

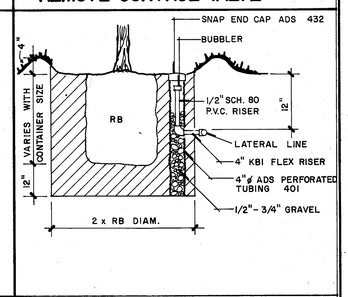

BUBBLER

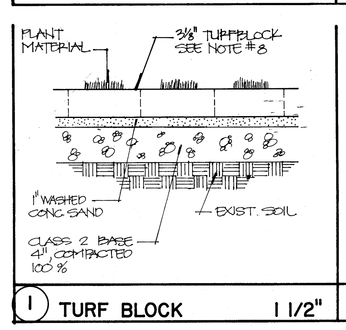

1 TURF BLOCK 1 1/2"

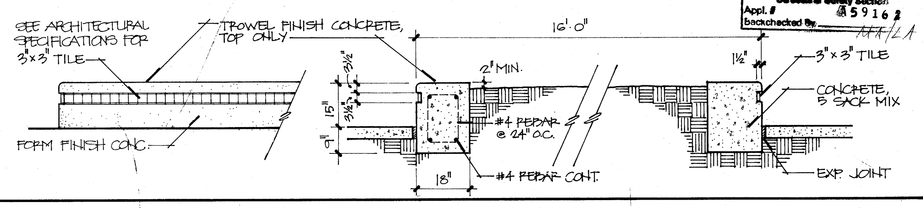

2 PLANTER ELEV. 1/2" PLANTER SECTION 1/2"

PORTION 1 FOR
IDENTICAL
Department of General Services
Office of the State Architect
MAR 11 1993
Structural Safety Section
Appl. # 5916
Backchecked by

IRRIGATION SCHEDULE

VALVE NUMBER / VALVE SIZE / WATER DEMAND

SYM	SIZE	MANUFACTURE	MODEL NO.	P.S.I.	COMMENTS
	1/3	HUNTER	PS 04-10A-V	30	S-TYPE SPRAY SPRINKLERS - ADJ.
	1/4		PS 04-10A-V	30	" " " "
	1/2		PS 04-10A-V	30	" " " "
	F		PS 04-10F-V	30	" " " FULL
	1/4		PS 04-12A-V	30	" " " ADJ.
	1/3		PS 04-12A-V	30	" " " "
	1/2		PS 04-12A-V	30	" " " "
	F		PS 04-12F-V	30	" " " FULL
	1/4		PS 04-15A-V	30	" " " ADJ.
	1/3		PS 04-15A-V	30	" " " "
	1/2		PS 04-15A-V	30	" " " "
	F		PS 04-15F-V	30	" " " FULL
	PART	RAINBIRD	P-50C-LA-20	35	TURF BIRD ROTOR POP UP
	FULL		R-50C-LA-20	35	" " " "
	PART	HUNTER	143G50D	40	ROTOR POP UP SPRINKLER
	FULL	HUNTER	142ADS00	40	" " "
		RAINBIRD	401	—	BUBBLER - INSTALL ON RISER
	1/4	HUNTER	PS 04-17A-V	30	S-TYPE SPRAY SPRINKLERS - ADJ.
	1/3		PS 04-17A-V	30	" " " "
	1/2		PS 04-17A-V	30	" " " "
	F		PS 04-17F-V	30	" " " "
	LINE SIZE	WILKENS OR EQ.	BRASS GLOBE		INSTALL IN BOX - SEE DETAIL
	1, 1½, 2	RAINBIRD	EFB CP-PPS-B		VALVES - INSTALL IN LOCKING BOX, ONE PER BOX - SEE DETAIL
		RAINBIRD	CCU-1		CLUSTER COMMAND UNIT - SEE NOTE #14
		POINT OF CONNECTION - VERIFY LOCATION ON SITE WATER PLAN			
	4"	FEBCO	825YD		BACKFLOW PREVENTOR, NOTE #7
	2"	CLA-VAL	136-01A/24V.		MASTER VALVE FLANGED ASSY. SEE NOTE #9
		RAINBIRD	PG SAT 24 W/ REMOTE BIRD ADAPTER PLUG - 4BA		CONTROLLERS - INSTALL IN LOCKABLE ENCLOSURE, SEE NOTES #15 & 11
		LASCO OR EQ.	CLASS 200		LOW PRESSURE SUPPLY LINE
		LASCO OR EQ.	SCH. 40		HIGH PRESSURE MAIN LINE
	1"	RAINBIRD	44 LRC		QUICK COUPLER - SEE DETAIL

IRRIGATION NOTES:

1. INSTALL ALL MATERIALS AS CALLED OUT IN DETAILS AND AS PER SPECIFICATIONS.
2. THERE SHALL BE NO DELETIONS OR SUBSTITUTIONS WITHOUT THE APPROVAL OF THE LANDSCAPE ARCHITECT.
3. ALL SPRINKLERS AND VALVES SHALL BE ADJUSTED FOR REQUIRED COVERAGE WITH MINIMUM OVERSPRAY. LANDSCAPE ARCHITECT TO HAVE FINAL APPROVAL.
4. ALL COMPONENT LOCATIONS ARE APPROXIMATE AND DIAGRAMATIC AS SHOWN. PLACE COMPONENTS IN PLANTER AREAS NEAREST LOCATION SHOWN.
5. ALL LINES RUNNING UNDER WALKS AND PAVING TO BE INSTALLED IN SCH. 40 SLEEVES TO BE A MINIMUM OF 1" LARGER THAN IRRIGATION LINE.
6. ALL SYSTEMS DESIGNED FOR PERFORMANCE AT 30,35,40 P.S.I. PRESSURE.
7. INSTALL BACKFLOW PREVENTER IN ENCLOSURE BY LEMURE, MODEL No. BF307242. PLACE ON 4" CONC. SLAB 3'-0"x 7'-0".
8. ALL QUICK COUPLER VALVES, GATE VALVES, AND REMOTE CONTROL VALVES TO BE INSTALLED IN LOCKABLE VALVE BOXES, ONE PER BOX, SEE SPEC'S.
9. ALL MASTER VALVES SHALL BE WIRED TO THE LAST STATION ON EACH CONTROLLER. VERIFY PRIOR TO FINAL HOOK-UP. MASTER VALVE & FLOW SENSER MUST BE INSTALLED AS A UNIT.
10. PROVIDE 1 EACH RAINBIRD RB-320PLUS REMOTE CONTROL TRANSCEIVER PER CONTROLLER.
11. INSTALL CONTROLLER AND CONTROL UNITS IN LEMURE ENCLOSURES. UNITS SHALL BE PEDESTAL MOUNTED AND SHALL BE LOCATED IN SERVICE YARD. VERIFY LOCATION ON PLANS & W/ LANDSCAPE ARCHITECT.
12. ALL IRRIGATION HEADS SHALL BE INSTALLED ON DOUBLE SWING JOINT ASSEMBLIES EXCEPT BUBBLERS. BUBBLERS SHALL BE INSTALLED ON FLEX RISERS.
13. LANDSCAPE CONTRACTOR SHALL HAVE THE OPTION TO MOVE OR RELOCATE MAINLINES, LATERAL LINES, HEADS AND VALVES DUE TO EXISTING UNDER-GROUND UTILITIES, UNFORSEEN OBSTACLES AND FOR EASE OF INSTALLATION AS APPROVED BY THE LANDSCAPE ARCHITECT.
14. RAINBIRD CCU-1 ASSY. SHALL BE INSTALLED ONLY AS PER MANUF. SPECS. UTILIZING ONLY RAINBIRD APPROVED 'MAXIWIRE' AND RELATED EQUIPMENT. ASSY. SHALL BE KTIPS 100OSS-CCU-1-CSA/12-TEL/P
15. CONTROLLER ASSY. SHALL BE: 3 EA. KTIPS-100OSS-24-CSA/24-REM/P-600POT-IR220P2-MPD AND 1EA. KTIPS-24-CSA/24-112G/T-REM/P-600POT-IR220P2-MPD
16. WIRE FROM FLOW SENSER TO CONTROLLER MUST BE ARIZONA BRAND WIRE AND MUST BE INSTALLED IN CONDUIT.

KLASSEN CORPORATION
Architecture
Planning
Construction
2021 Westwind Drive
Bakersfield, CA 93301
(805) 327-0875
(805) 327-5933 Fax

LICENSED ARCHITECT
RICHARD L. KLASSEN
C 15401
STATE OF CALIFORNIA

C-8 610 C-8 401

The above drawings and specifications and ideas, designs and arrangements represented thereby are and shall remain the property of the architect and no part thereof shall be copied, disclosed to others or used in conjunction with any work or project other than the specific project for which they were prepared and developed. Visual contact with these drawings or specifications shall constitute conclusive evidence of acceptance of these restrictions.

Written dimensions on these drawings shall have precedence over scaled dimension; contractors shall verify and be responsible for, all dimensions and conditions on the job and this office must be notified of any variations from the dimensions and conditions shown by these drawings. Shop details must be submitted to this office for approval before proceeding with fabrication.

BAKERSFIELD CITY SCHOOL DISTRICT
MESA MARIN ELEMENTARY SCHOOL

MESA MARIN ELEMENTARY SCHOOL
MESA MARIN ELEMENTARY SCHOOL DRIVE
BAKERSFIELD, CA

Sheet title: DETAIL SHEET

LANDSCAPE ARCHITECTURE
RALPH ADAME A.S.L.A.
LANDSCAPE ARCHITECT #2000
5405 STOCKDALE HWY. #207
BAKERSFIELD, CALIF. 93309
(805) 397-8661

Date:	Issued for:

Date:		Revisions:
1-5-94	1	INST BULL. 009
10-94	2	AS BUILTS

Drawn by: R.A.
Checked by:
Job no: 9211.063
Sheet: L-4
Sheet of:
Date: