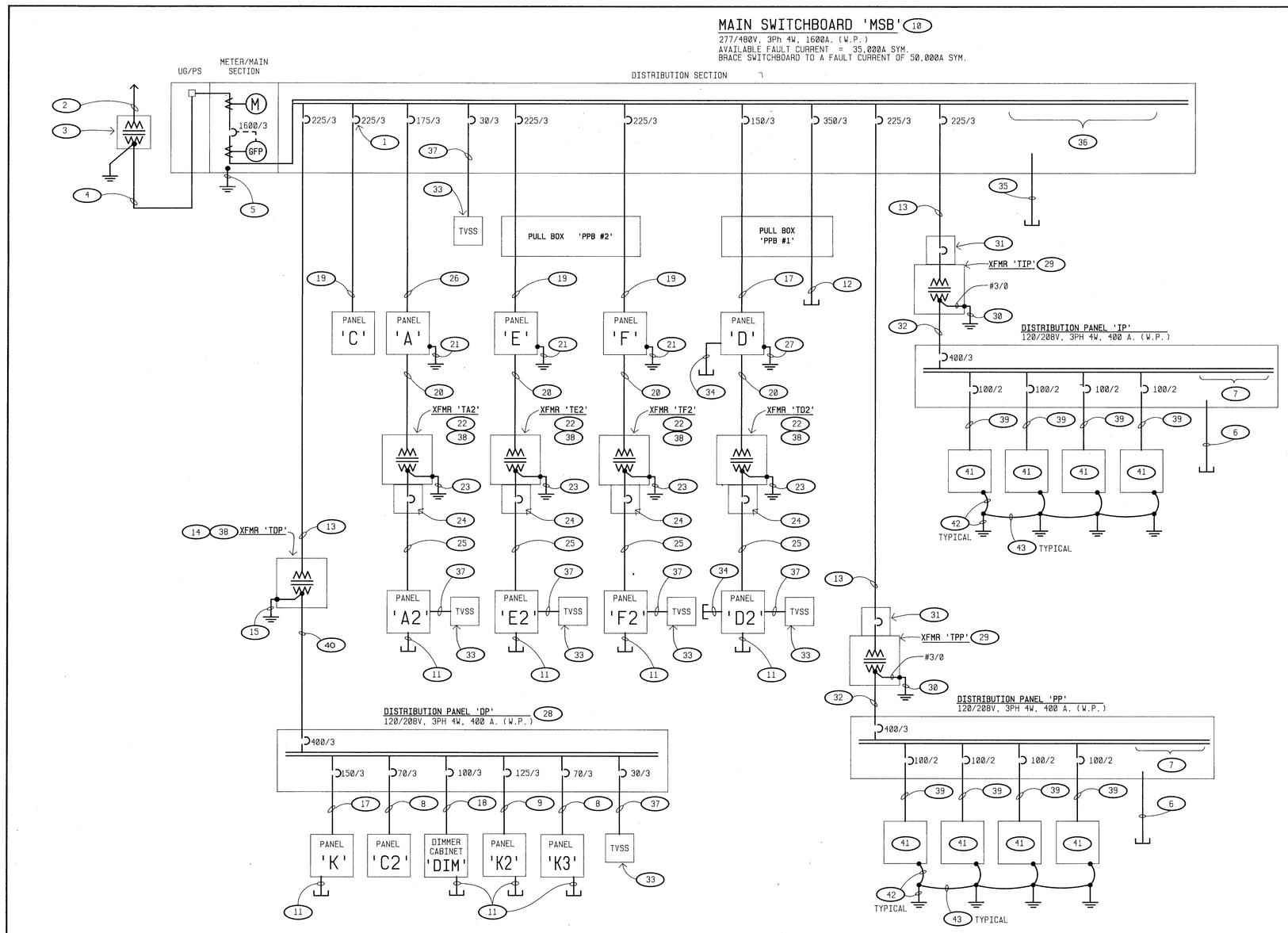

1 E-16 **ONE LINE DIAGRAM**

NO SCALE

ONE LINE DIAGRAM NOTES:

(ALL CONDUCTORS SHALL BE THWN-CU, U.O.N.)

1. CURRENT LIMITING CIRCUIT BREAKER TO LIMIT LET-THRU CURRENT TO 14,000 A.I.C.
2. TWO 4" PRIMARY CONDUITS TO P.G.& E. FACILITIES. VERIFY EXACT SERVICE CONNECTION POINT WITH P.G.& E.
3. P.G.& E. PAD MOUNTED TRANSFORMER. PAD AND BARRIER POSTS BY ELECTRICAL CONTRACTOR PER P.G.& E. REQUIREMENTS.
4. FIVE 5" SECONDARY CONDUITS.
5. 1 #3/0 TO GROUNDING ELECTRODES PER DETAIL #13/E15.
6. FOUR 1 1/4"C STUBS FOR FUTURE PORTABLE CLASSROOM BUILDINGS. CAP AND TAG.
7. SPACE FOR A MINIMUM OF FOUR 100/2 CIRCUIT BREAKERS. PROVIDE MOUNTING HARDWARE FOR FUTURE CONNECTIONS.
8. 1 1/4"C - 4 #4 + 1 #8 GND
9. 2"C - 4 #1 + 1 #6 EQUIP. GND + 1 #6 ISO. GND
10. SHORT CIRCUIT CURRENT INTERRUPTING RATING OF ALL CIRCUIT BREAKERS IN 'MSB' SHALL BE 42K A.I.C..
11. TWO 1" CONDUIT STUBS INTO ACCESSIBLE ATTIC SPACE. CAP AND TAG.
12. TWO 3 1/2"C STUBS FOR FUTURE "MAGNET PROGRAM" AND "SPECIAL EDUCATION" PORTABLE CLASSROOM BUILDINGS. CAP AND TAG.
13. 2 1/2"C - 3 #4/0 + 1 #4 GND.
14. TRANSFORMER 'TDP' SHALL BE RATED AT 480:120/208V 3ϕ 4W, 150 KVA, NEMA 3R.
15. 3/4"C - 1 #2/0 TO GROUNDING ELECTRODES PER DETAIL #10/E15.
16. NOT USED.
17. 2"C - 4 #1/0 + 1 #6 GND.
18. 1 1/2"C - 4 #2 + 1 #8 GND.
19. 2 1/2"C - 4 #4/0 + 1 #4 GND.
20. 1 1/4"C - 3 #4 + 1 #8 GND.
21. 3/4"C - 1 #2 TO GROUNDING ELECTRODES PER REMOTE BUILDING GROUNDING ELECTRODE SYSTEM, DETAIL #17/E15.
22. TRANSFORMERS 'TA2', 'TD2', 'TE2' AND 'TF2' SHALL BE RATED AT 480:120/208V 3ϕ 4W, 45 KVA, NEMA 3R.
23. 3/4"C - 1 #4 TO GROUNDING ELECTRODES PER TRANSFORMER BONDING AND GROUNDING DETAIL #10/E15.
24. 150/3 SECONDARY CIRCUIT BREAKER IN A NEMA 3R ENCLOSURE AT TRANSFORMER.
25. ✱ 2 1/2"C - 5 #2/0 + 1 #6 EQUIP. GND + 1 #6 ISO. GND.
26. 2"C - 4 #2/0 + 1 #6 GND.
27. 3/4"C - 1 #4 TO GROUNDING ELECTRODES PER REMOTE BUILDING GROUNDING ELECTRODE SYSTEM, DETAIL #17/E15.
28. PANEL SHALL BE EQUIPPED WITH AN ISOLATED GROUND BUS AND HAVE SPACE FOR TWO 125/3 CIRCUIT BREAKERS.
29. TRANSFORMERS 'TPP' AND 'TIP' SHALL BE RATED AT 480:120/208V 3ϕ 4W, 150 KVA, NEMA 3R.
30. 1 #6 TO 5/8" DIAMETER x 10' LONG COPPER-CLAD GROUND ROD.
31. 225/3 PRIMARY ENCLOSED CIRCUIT BREAKER, NEMA 3R.
32. TWO 2 1/2"C - 4 #3/0 + 1 #2 GND. IN EACH.
33. TRANSIENT VOLTAGE SURGE SUPPRESSION, PANEL MOUNT TYPE, PER SPECIFICATIONS.
34. ONE 1 1/2"C STUB FOR FUTURE "HEAD START" PORTABLE CLASSROOM BUILDING. CAP AND TAG.
35. THREE 3"C STUBS. CAP AND TAG.
36. SPACE FOR MINIMUM OF THREE 225/3 CIRCUIT BREAKERS. PROVIDE MOUNTING HARDWARE FOR FUTURE CONNECTIONS.
37. 3/4"C - 4 #10 + 1 #10 GND
38. XFMR SHALL HAVE A K-FACTOR RATING OF 4 PER ANSI.IEEE C57.110-1986.
39. 1 1/4"C - 3 #2 + 1 #8 GND
40. TWO 2 1/2"C - 4 # 3/0 + 1 # 2 EQUIP GND + 1 # 2 ISO GND IN EACH
41. 100 AMP 120/208V 1ϕ 3W SUB-PANEL SUPPLIED WITH PORTABLE CLASSROOM BUILDING. VERIFY EXACT LOCATION WITH BUILDING SUPPLIER.
42. 1/2"C - 1 #6 TO PORTABLE BUILDING GROUNDING ELECTRODE SYSTEM PER DETAIL # 2/E.1a.
43. RUN 1 #2 BARE CONDUCTOR BETWEEN ADJACENT GROUND RODS. MINIMUM COVER OF 18".

✱ NOTE: FEEDERS SHOWN WITH 5 WIRES + GROUNDS HAVE TWO NEUTRAL CONDUCTORS.

SERVICE CALCULATION:

	PROPOSED	FUTURE
LIGHTING x 125%	84 KVA	41 KVA
RECEPTACLES (FIRST 10 KW x 100%, REMAINDER x 50%) . .	41 KVA	14 KVA
H.V.A.C. x 100%	363 KVA	190 KVA
MISCELLANEOUS x 100%.	34 KVA	6 KVA
KITCHEN EQUIPMENT x 65% . . .	61 KVA	
STAGE LIGHTING x 100%	17 KVA	
SUB-TOTAL	600 KVA	245 KVA
TOTAL	845 KVA	
AT 277/480V, 3 PH 4 W . . .	1,018 AMPS	

THEREFORE A 1600 AMP SWITCHBOARD IS ADEQUATE.

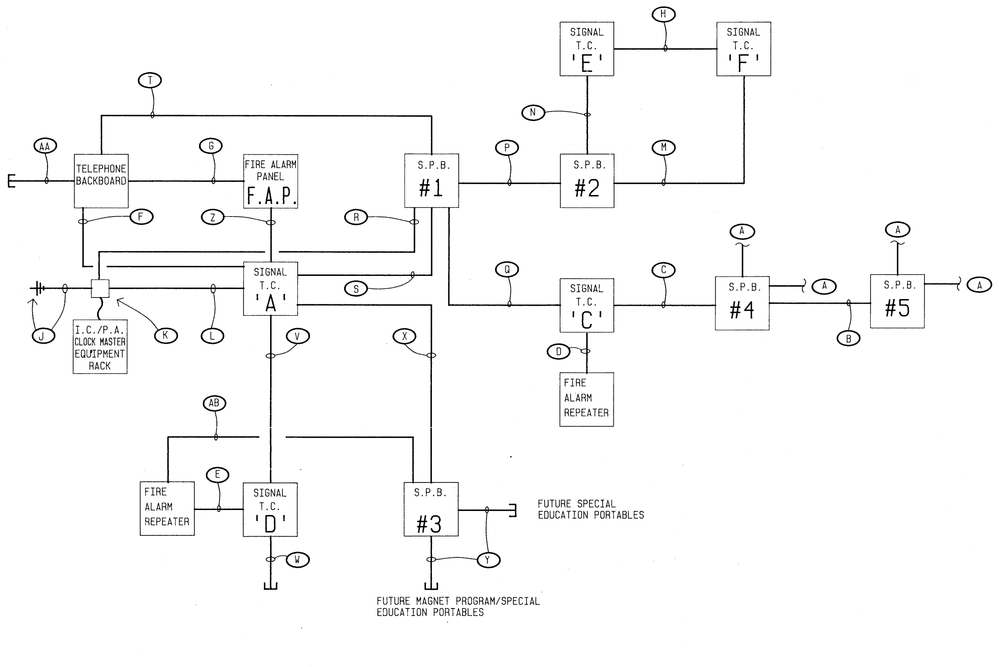

2 E-16 **SIGNALS LINE DIAGRAM**

NO SCALE

SIGNALS LINE DIAGRAM NOTES:

- (A) REFER TO PARTIAL SITE ELECTRICAL PLAN, SHEET #E.1a FOR CONDUIT AND WIRING/CABLING REQUIREMENTS.
- (B) 1"C - 8 #12, 4 #14 (FIRE ALARM). 4 #12 ARE FOR FUTURE INTERMEDIATE PORTABLES, SIG. CKT #4F. LEAVE 25' OF ADDITIONAL WIRE LENGTH COILED UP AND TAPED OFF INSIDE S.P.B. #5; 3/4"C - FOUR I.C. CABLES (INTERCOM); AND A SPARE 3/4"C (FOR FUTURE I.C. CABLES); 1 1/4"C (TELEVISION); 1 1/4"C (BURGLAR ALARM); 1 1/4"C (COMPUTER); 1 1/4"C (SPARE).
- (C) 1"C - 12 #12, 4 #14 (FIRE ALARM). 4 #12 ARE FOR THE FUTURE PRIMARY PORTABLES, SIG.CKT. #4e. LEAVE 25' OF ADDITIONAL WIRE LENGTH COILED UP AND TAPED OFF INSIDE S.P.B. #4; 1"C - EIGHT I.C. CABLES (INTERCOM) AND A SPARE 1"C (FOR FUTURE I.C. CABLES); 1 1/2"C (TELEVISION); 1 1/4"C (BURGLAR ALARM); 1 1/2"C (SPARE); 1 1/2"C (COMPUTER).
- (D) 1"C - 12 #12 (FIRE ALARM).
- (E) 3/4"C - 6 #12 (FIRE ALARM)
- (F) 1 1/2"C (TELEPHONE); 1 1/2"C (BURGLAR ALARM).
- (G) 1"C (TELEPHONE).
- (H) 3/4"C - 4 #12 (FIRE ALARM).
- (J) RUN 1"C TO ROOF FOR CONNECTION TO AM/FM ANTENNA. PROVIDE ANTENNA AND RELATED WORK PER DETAIL #9/E15.
- (K) PROVIDE A 18"W x 18"H x 4" DEEP SCREW COVER CAN WITH THREE 3" DIAMETER GROMMETED OPENINGS IN COVER. MOUNT FLUSH IN WALL BEHIND EQUIPMENT RACK AT +12" A.F.F. TO BOTTOM OF CAN.
- (L) 2 1/2"C - 40 I.C. CABLES. RUN IN ATTIC SPACE.
- (M) 3/4"C - 4 #12, 4 #14 (FIRE ALARM); 1 1/4"C - 10 I.C. CABLES (INTERCOM); 1"C (TELEVISION); 1"C (BURGLAR ALARM); 1 1/4"C (COMPUTER); 1"C (SPARE).
- (N) 1"C - 2 #10, 6 #12, 6 #14 (FIRE ALARM); 1 1/4"C - 10 I.C. CABLES (INTERCOM); 1"C (TELEVISION); 1"C (BURGLAR ALARM); 1 1/4"C (COMPUTER); 1"C (SPARE).
- (P) 1"C - 4 #10, 4 #12, 6 #14 (FIRE ALARM); 1 1/2"C - 20 I.C. CABLES (INTERCOM); 1 1/2"C (TELEVISION); 1 1/2"C (BURGLAR ALARM); 1 1/2"C (COMPUTER); 1 1/2"C (SPARE).
- (Q) 1 1/4"C - 14 #12, 12 #14 (FIRE ALARM); 2"C - 27 I.C. CABLES (INTERCOM); 1 1/2"C (TELEVISION); 1 1/2"C (BURGLAR ALARM); 1 1/2"C (COMPUTER); 1 1/2"C (SPARE); 1 1/4"C (TELEPHONE).
- (R) TWO 2"C - 47 I.C. CABLES (INTERCOM). RUN CABLES TO RACK VIA NOTE (X).
- (S) 1 1/4"C - 4 #10, 18 #12, 18 #14 (FIRE ALARM); 2"C (TELEVISION); 2"C (COMPUTER); 2"C (SPARE).
- (T) 2"C (BURGLAR ALARM).
- (V) 1"C - 6 #12, 6 #14 (FIRE ALARM); 1"C - 8 I.C. CABLES (INTERCOM); 1"C (TELEVISION); 1"C (BURGLAR ALARM); 1"C (COMPUTER); 1"C (SPARE).
- (W) 3/4"C (FIRE ALARM); 3/4"C (INTERCOM); 3/4"C (TELEVISION); 3/4"C (BURGLAR ALARM); 1"C (COMPUTER); 1"C (SPARE); CAP AND TAG ALL STUBS.
- (X) 1"C (FIRE ALARM); 1 1/2"C (INTERCOM); 1 1/2"C (FUTURE I.C.) FOUR 1 1/2"C (TELEVISION/BURGLAR ALARM/COMPUTER/SPARE).
- (Y) 1"C (FIRE ALARM); 1"C (INTERCOM); FOUR 1 1/4"C (TELEVISION/BURGLAR ALARM/COMPUTER/SPARE). CAP AND TAG ALL STUBS.
- (Z) 2"C - 4 #10, 20 # 12, 30 # 14
- (AA) 1"C. CAP AND TAG.
- (AB) 1"C - (FIRE ALARM).

APPROVALS

OFFICE OF THE STATE ARCHITECT
ACCESS COMPLIANCE SECTION
APPLICATION PER W. MO 90.85
59162
MAR 11 98
APPROVAL of this plan does not authorize or approve any omission or deviation from applicable regulations.
Reviewed by

Department of General Services
Office of the State Architect
MAR 11 1993
PORTION 1
Structural Safety Section
Checked by 59162

KLASSEN CORPORATION

Architecture
Planning
Construction

2021 Westwind Drive
Bakersfield, CA 93301
(805) 327-0875
(805) 327-5933 Fax

REGISTERED ARCHITECT
L. PHIL KLASSEN
#C10401
Exp. 1-31-95
STATE OF CALIFORNIA

The above drawings and specifications and ideas, designs and arrangements represented thereby are and shall remain the property of the architect, and no part thereof shall be copied, disclosed to others or used in connection with any work or project other than the specific project for which they have been prepared and developed without the written consent of the architect. Visual contact with these drawings or specifications shall constitute conclusive evidence of acceptance of these restrictions.

Written dimensions on these drawings shall have precedence over scaled dimensions; contractors shall verify and be responsible for, all dimensions and conditions on the job and this office must be notified of any variations from the dimensions and conditions shown by these drawings. Shop details must be submitted to this office for approval before proceeding with fabrication.

BAKERSFIELD CITY SCHOOL DISTRICT
MESA MARIN ELEMENTARY SCHOOL
BAKERSFIELD, CA.

Sheet title: ONE LINE, SIGNALS LINE, AND FIRE ALARM WIRING DIAGRAMS

REGISTERED PROFESSIONAL ENGINEER
Gregory Carmichael
No. 7198
Exp. 9/30/93
Electrical
STATE OF CALIFORNIA

Date:	Issued for:

Date:	Revisions:	
10-94	A	AS BUILTS

Drawn by: R.T.S.

Job no: 1223

Dgn. file:

Sheet: E.16

Sheet of: 17

Date: