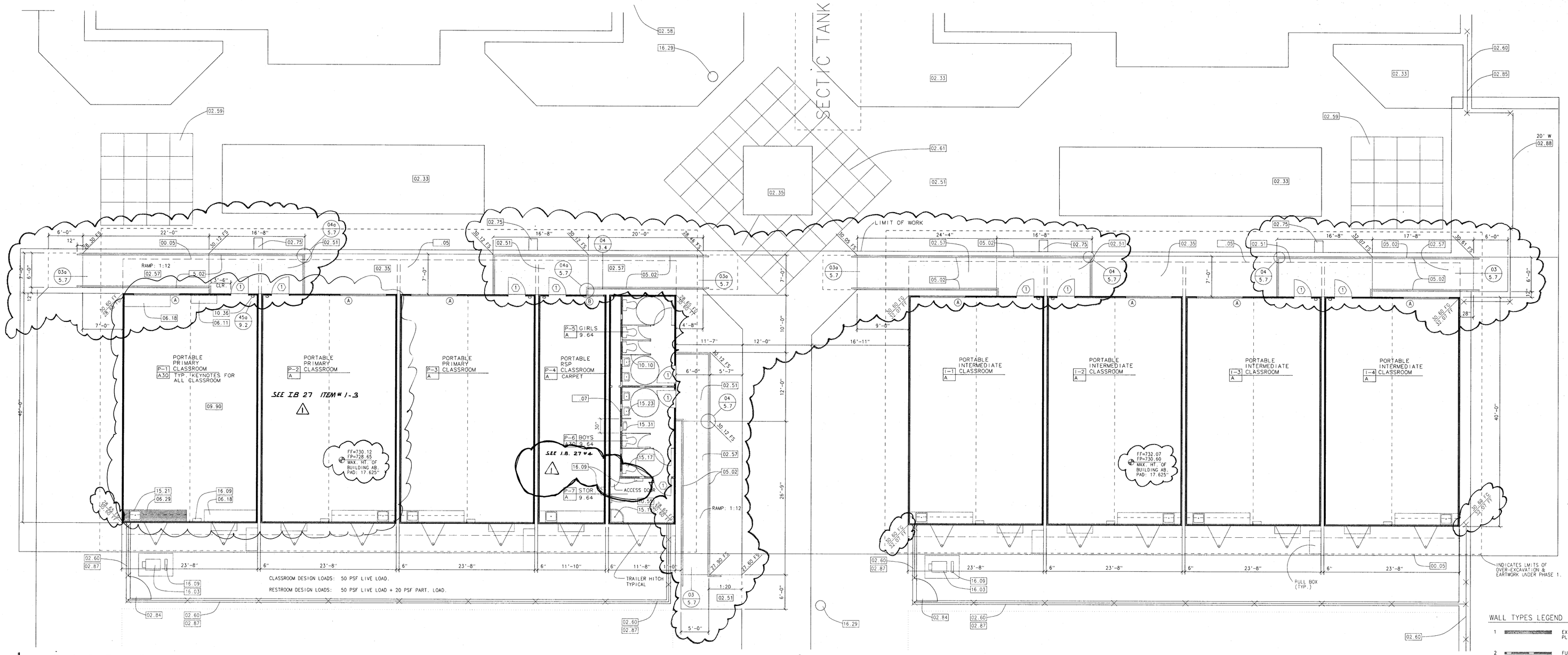

PORTABLE PRIMARY CLASSROOM FLOOR PLAN 'B-1'

E-1 OCCUPANCY, TYPE V-N

PORTABLE INTERMEDIATE CLASSROOM FLOOR PLAN 'B-2'

E-1 OCCUPANCY, TYPE V-N

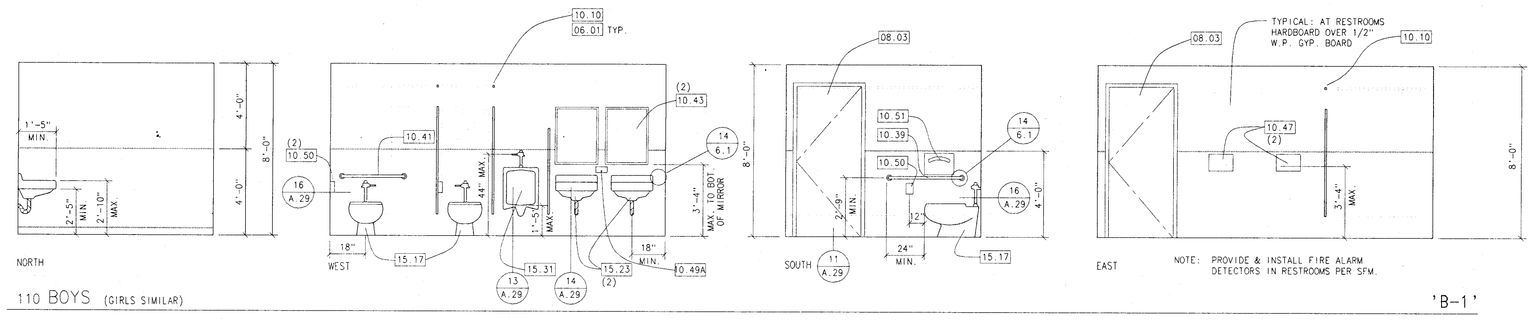

110 BOYS (GIRLS SIMILAR) 'B-1'

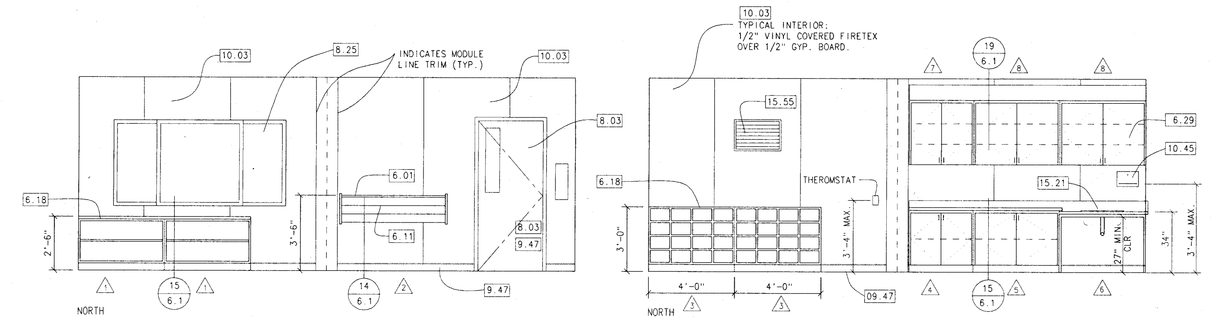

P-1 PRIMARY CLASSROOM (INTERMEDIATE SIMILAR) 'B-1'

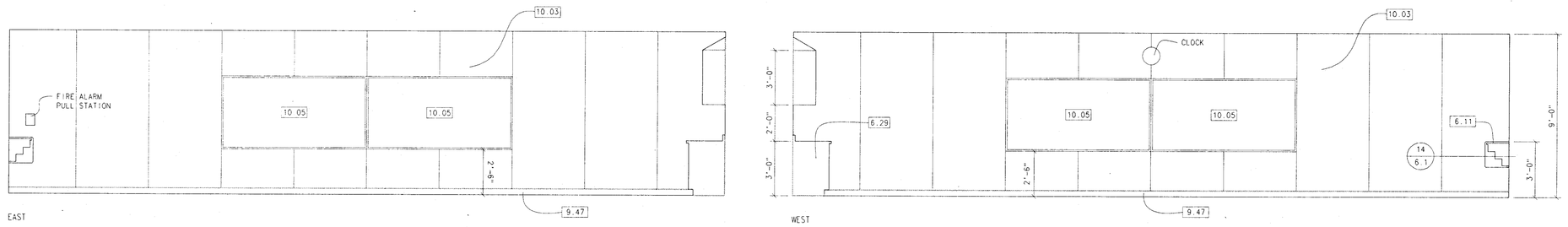

101 INTERMEDIATE CLASSROOM 'B-1'

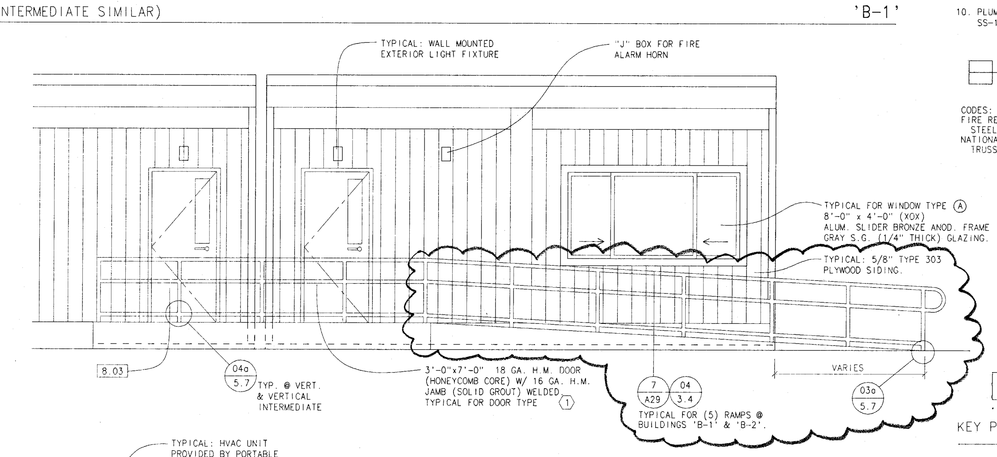

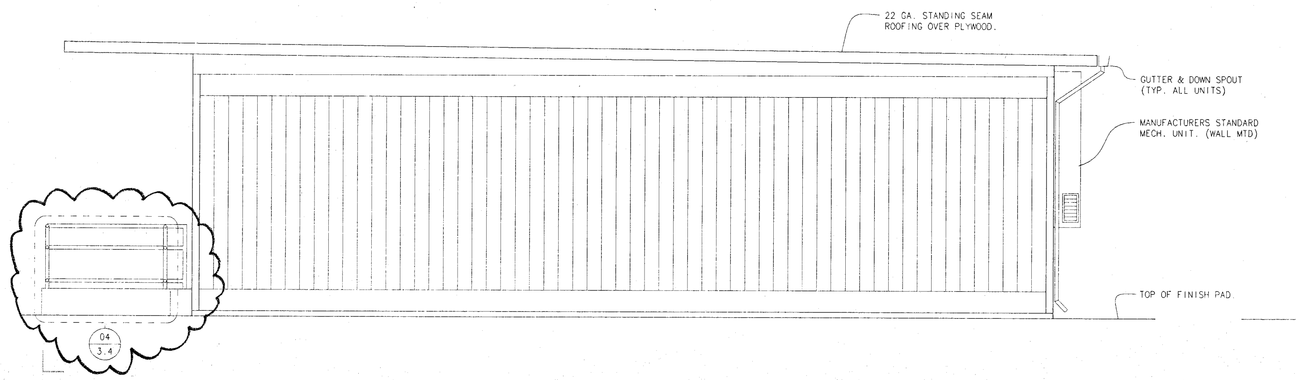

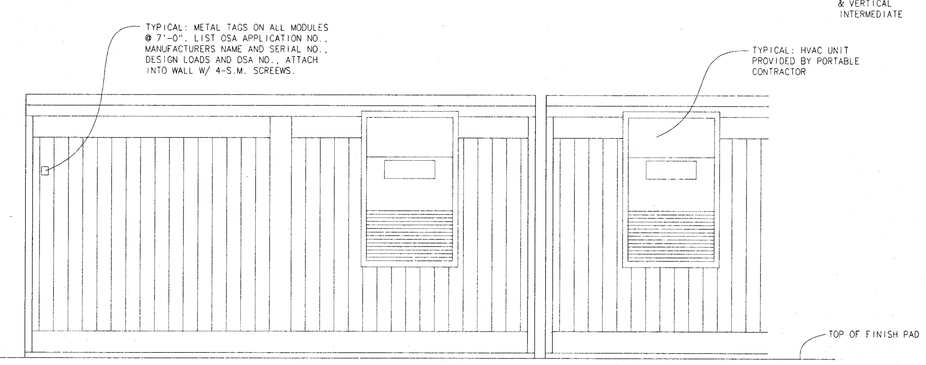

KEYNOTES:

.01	NOT IN CONTRACT	00000
.03	PROVIDED BY OWNER	00000
.05	LINE OF ROOF ABOVE	00000
.07	MECHANICAL SPACE	00000
2.35	PLANTING AREA	02480
2.51	CONCRETE WALK (4" THICK)	02514
2.57	CONCRETE WHEELCHAIR RAMP	02514
2.60	CONC. CURB AT ALL CHAIN LINK FENCING 8" WIDE x 6" DEEP	02830
2.61	COLORED CONCRETE PAVEMENT w/ TOOLED SCORING	02514
2.75	CATCH BASIN/DROP INLET/DIVERSON BOX	02720
2.84	C.L. FENCE GATE (HT. TO MATCH ADJ. WALL AS NOTED	02830
2.87	CHAINLINK FENCE (6' HIGH)	02830
5.02	STEEL PIPE GUARDRAIL/HANDRAIL (PAINTED)	05521
6.01	PROVIDE SOLID BACKING IN WALL FOR WALL MOUNTED ACCESSORIES	06100
6.11	LAM. PLASTIC WALL MT'D. COAT RACK	06400
6.18	BASE CABINET	06400
6.29	LAMINATE PLASTIC BASE & UPPER CABINET (SLOPING TOP @ UPPER)	06400
8.03	HOLLOW METAL DOOR AND FRAME	08110
9.47	RUBBER TOPSET BASE (4" HIGH)	09650
9.59	PAINT	09900
9.64	SHEET VINYL FLOORING w/ 6" COVED BASE	09650
9.90	CARPET FLOORING C&A GUARDIAN PLUS MARK I RS, STYLE # 11097.	09680
10.03	TACK WALL (1/2" THICK W/VINYL COVERING) OVER 1/2" GYPSUM BOARD	10100
10.05	PORCELAIN ENAMEL CHALKBOARD (4'xB') (NO LINES)	10100
10.10	SOLID PLASTIC FLOOR MOUNTED OVERHEAD BRACED PARTITIONS	10160
10.36	SURFACE MTD. FIRE EXTINGUISHER W/ MOUNTING BRACKET.	10522
10.39	GRAB BAR 42" L. (Bobrick B-6206)	10800
10.41	GRAB BAR 36" L. (Bobrick B-6206)	10800
10.43	1/4" PLATE GLASS MIRROR IN STAIN. STEEL FRAME (Bobrick B-290 Series)	10800
10.45	SURFACE MOUNTED PAPER TOWEL DISPENSER (Bobrick B-263)	10800
10.47	WARM AIR HAND DRYER (World Industries)	10800
10.49A	SURFACE MOUNTED POWDER SOAP DISPENSER (Bobrick B-175)	10800
10.50	SURFACE MOUNTED SHEET TOILET PAPER DISPENSER (Bobrick B-272)	10800
10.51	SURFACE MOUNTED TOILET SEAT COVER DISPENSER (Bobrick B-221)	10800
10.55	MOP RACK (Bobrick B-223 36")	10800
15.17	TOILET	15400
15.19	JANITOR SINK	15400
15.21	SINK	15400
15.23	LAVATORY	15400
15.25	WATER HEATER	15400
15.31	URINAL	15400
15.55	MECHANICAL GRILLE	15800
16.03	TRANSFORMER	16100
16.09	ELECTRICAL PANEL	16100

WALL TYPES LEGEND

1 — EXTERIOR WALL: 2x STUDS @ 16" o.c. w/ 5/8" TYPE 303 PLYWOOD SIDING.

2 — FURRED WALL: 2x STUDS @ 16" o.c. w/ 1/2" GYP. BD. @ INTERIOR, UNFINISHED OPPOSITE SIDE.

GENERAL NOTES:

1. SITE INSTALLATION INCLUDES: FOUNDATION, BOLTING OF MODS., EXTERIOR AND INTERIOR CLOSE UP AT MODULE LINE, CARPET, SHEET VINYL ROOF CLOSURE, AND BONDING OF METAL COMPONENTS AND RAMP TO ELECTRIC PANEL AS INDICATED ON PLANS.
2. SITE WORK NOT INCLUDED: SITE GRADING, GROUNDING OF BUILDINGS, ELECTRIC HOOK UP AND TRANSITION RAMPS TO GRADE.
3. MODULAR CONTRACTOR TO PROVIDE ARCHITECT W/ OSA APPROVABLE PLANS AND COMPARISON APPROVAL WITH OSA. PLANS MUST INCLUDE PORTABLE BUILDING STRUCTURAL ENGINEER'S STAMPED & SIGNED DRAWINGS AND CALCULATIONS.
4. WINDOW TYPE (B) 3'-0" x 4'-0" (XO) ALUM. SLIDER BRONZE ANOD. FRAME w/ GRAY S.G. (1/4" THICK) GLAZING.
5. DOOR HARDWARE: DOOR TYPE (1) PROVIDE HINGES, LOCKSET (YALE 'AU' SERIES), THRESHOLD, DOOR BOTTOM, WEATHER STRIP AND CLOSURE.
6. CONSTRUCTION TYPE V-N, OCCUPANCY E.I. CLASSROOM SIZE: 946.40 S.F., (1) EXIT REQUIRED.
7. FOR REQUIREMENTS NOT LISTED ON THIS SHEET REFER TO SPECIFICATION SECTION 13030.
8. THE DISTRICT WILL PROVIDE AND INSTALL (WIRING AND CONTROLS) THE ENERGY MANAGEMENT SYSTEM. ELECTRICAL CONTRACTOR SHALL PROVIDE ALL CONDUITING FOR CONTROL WIRING. POWER WIRING AND DISCONNECT SWITCHES ARE INCLUDED IN DIVISION 16 - ELECTRICAL OF THE SPECIFICATIONS. HVAC UNITS SHALL BE BARD UNITS (OR APPROVED EQUAL) COMPLETE WITH ADJUSTABLE OUTSIDE AIR DAMPER WITH LOCKING QUADRANT, 15 KW STRIP HEAT MINIMUM, FILTERS AND TIME-TEMPERATURE DEFROST.
9. CARPETING SHALL EXTEND OVER MODULE FLOOR JOINT OF UNIT. METAL SEAM STRIPS ARE NOT ACCEPTABLE.
10. PLUMBING FIXTURES: FOR SPECIFICATIONS OF FIXTURES L-1, WC-1, U-1 & SS-1 REFER TO SHEET P-8.

ROOM NO.
REFER TO SHEET A.26 & A.27 FOR INTERIOR ELEVS.

CODES:
FIRE RESISTANCE DESIGN MANUAL, 11TH EDITION, WP - DESIGNATION
STEEL BEAMS: BM 1135
NATIONAL EVALUATION SERVICE COMMITTEE (NER):
TRUSSES: NER-200, ICBO-PFC-4354

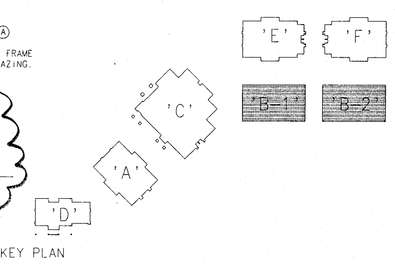

KEY PLAN

KLASSEN CORPORATION
Architecture
Planning
Construction
2021 Westwind Drive
Bakersfield, CA 93301
(805) 327-0875
(805) 327-5933 Fax

LICENSED ARCHITECT — L. PAUL KLASSEN — C10401 — REV 1-31-95 — STATE OF CALIFORNIA

The above drawings and specifications and ideas, designs and arrangements represented thereby are and shall remain the property of the architect and no part thereof shall be copied, disclosed to others or used in connection with any work or project other than the specific project for which they have been prepared and developed without the written consent of the architect. Visual contact with these drawings or specifications shall constitute conclusive evidence of acceptance of these restrictions.
Written dimensions on these drawings shall have precedence over scale dimensions. Contractors and sub-contractors shall be responsible for all dimensions and conditions on the job and this office must be notified of any variations from the dimensions and conditions shown by these drawings. Shop details must be submitted to this office for approval before proceeding with fabrication.

BAKERSFIELD CITY SCHOOL DISTRICT
MESA MARIN ELEMENTARY SCHOOL
BAKERSFIELD, CA.

Sheet title: PRIMARY & INTERMEDIATE CLASSROOMS FLOOR PLANS, INTERIOR AND EXTERIOR ELEVATIONS - B-1 & B-2

Date:	Issued for:
1-25-94	I.B. #11

Date:		Revisions:
4-28-94	1	INST BUL. 027
10-94	A	AS BUILTS

Drawn by: done
Job no: 1223
Dgn. file: MMA30REV.2D
Sheet: A.30r
Sheet of: 31
Date: Jan 14, 1994