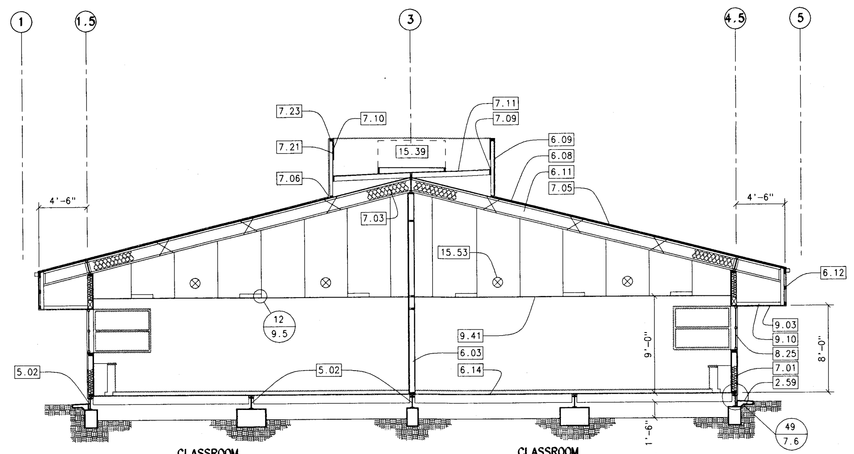

A SECTION
A.25 1/8" = 1'-0"

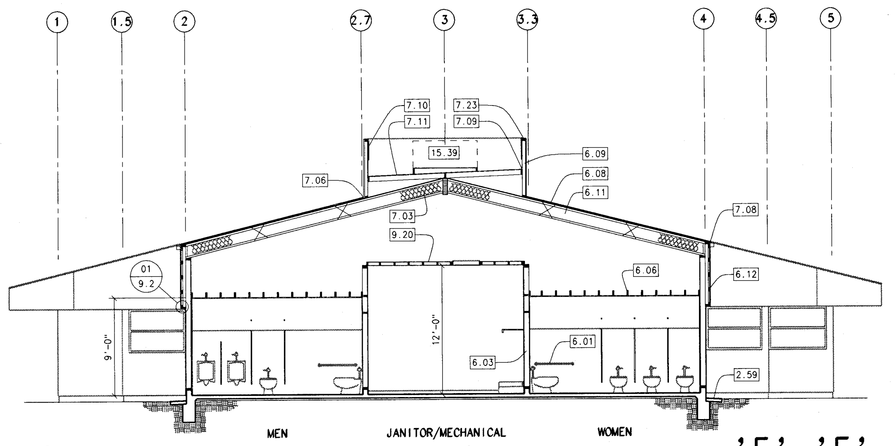

D SECTION
A.25 1/8" = 1'-0"

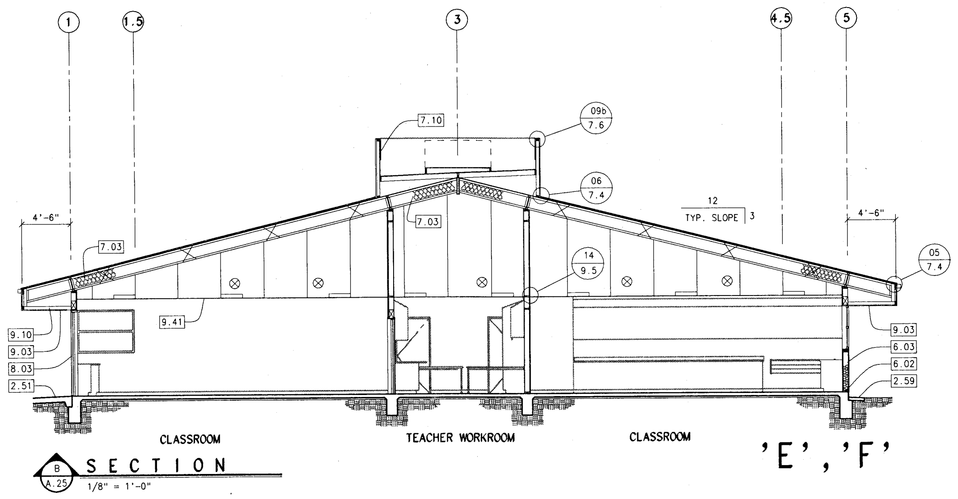

B SECTION
A.25 1/8" = 1'-0"

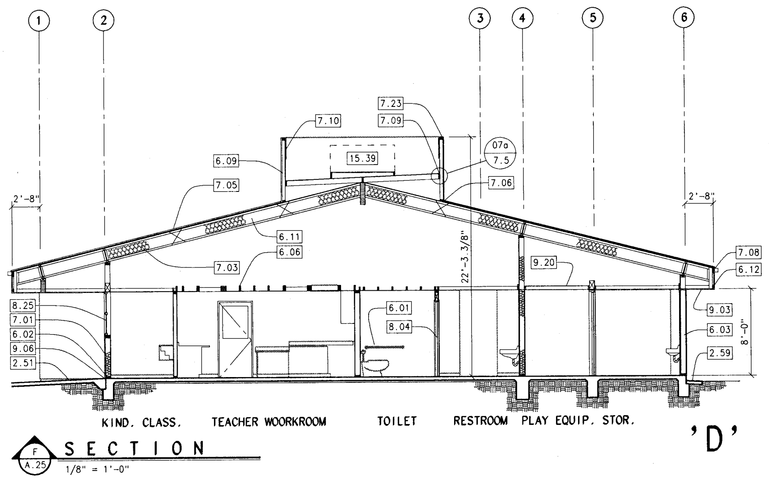

F SECTION
A.25 1/8" = 1'-0"

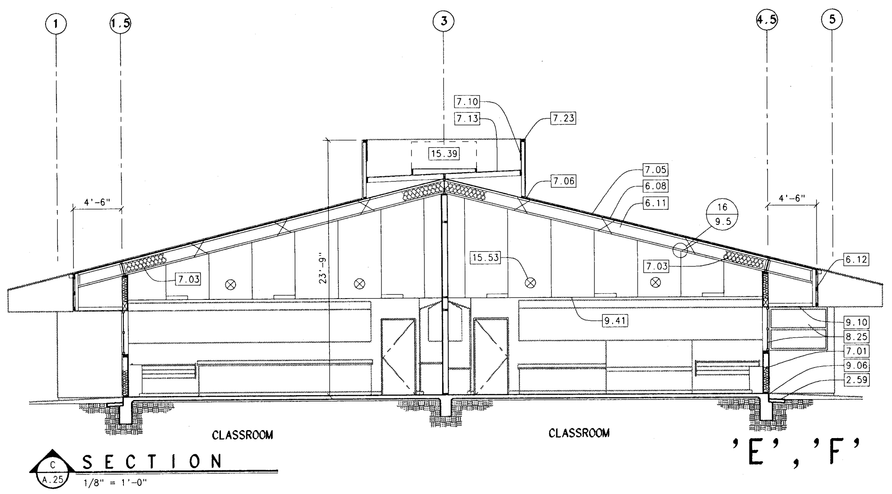

E SECTION
A.25 1/8" = 1'-0"

KEYNOTES:

2.51	CONCRETE WALK (4" THICK)	02514
2.59	CONCRETE MOW STRIP (18" WIDE)	02514
5.02	STEEL FLOOR BEAM	05120
5.97	WOOD FRAMED PARAPET	06100
6.01	PROVIDE SOLID BACKING IN WALL FOR WALL MOUNTED ACCESSORIES	06100
6.02	2x P.T.D.F. PLATE (TYP.)	06100
6.03	2x STUDS @ 16" o/c	06100
6.05	2x8 STUDS @ 16" o/c	06100
6.06	2x C.J./R.R. @ 16" o/c	06100
6.07	GLU-LAM WOOD BEAM	06100
6.08	PLYWOOD ROOF SHEATHING	06100
6.09	WOOD FRAME PARAPET	06100
6.10	PLYWOOD CRICKET	06100
6.11	TRUSS JOIST ROOF FRAMING	06100
6.12	2x HORIZONTAL FURRING	06100
6.14	2x FLOOR JOISTS	06100
7.01	6" BATT INSULATION - (R-19)	07200
7.03	9" BATT INSULATION - (R-30)	07200
7.05	PREFINISHED METAL ROOFING	07410
7.06	PREFINISHED METAL REGLET TO STUCCO PARAPET WALL	07410
7.07	PREFINISHED METAL RAKEWALL FLASHING	07410
7.08	PREFINISHED METAL RAKE & EAVE TRIM	07410
7.09	CONTINUOUS 3" FIBER CANT STRIP	07510
7.10	FIBERGLASS COMPOSITION SHINGLES	07510
7.11	BUILT-UP COMPOSTION ROOFING	07510
7.13	WALKWAY PROTECTION CAPSHEET	07510
7.15	RIDGID INSULATION BOARD (TAPERED FOR ROOF DRAINAGE)	07510
7.21	24 GA. G.I. COUNTER FLASHING	07600
7.23	24 GA. G.I. CAP FLASHING - PAINTED	07600
7.29	ROOF HATCH 30" x 36"	07700
7.31	ROOF ACCESS ALUMINUM LADDER	07700
7.33	SMOKE HATCH	07700
8.03	HOLLOW METAL DOOR & FRAME	08110
8.04	SOLID MASONITE DOOR w/ H.M. FRAME	08110
8.25	BRONZE ANODIZED ALUMINUM FRAMED WINDOW w/ PROJECTED TOP & FIXED BOTTOM SECTION, GLAZED w/ BRONZE TINT (NAIL-IN)	08520
9.03	CEMENT PLASTER SOFFIT w/ SAND FLOAT FINISH	09200
9.06	PLASTER WEEP SCREED	09200
9.10	CONTINUOUS VENT SCREED (SUPERIOR #115 - 3.5")	09250
9.17	CEMENT PLASTER INTERIOR FINISH	09250
9.18	2 - LAYERS 5/8" GYPSUM BOARD DRYWALL TYPE 'X' (FIRE RATED)	09250
9.19	5/8" GYPSUM BOARD DRYWALL TYPE 'X' (FIRE RATED)	09250
9.20	5/8" GYPSUM BOARD DRYWALL w/ (1) LAYER, 5/8" TYPE 'X' @ TOP SIDE ATTIC OF 2x CEILING JOISTS	09250
9.23	DRAFT STOPS	09250
9.41	2" x 4' SUSPENDED T-BAR CEILING w/ FLUSH LAY-IN PANEL	09510
15.39	H.V.A.C. EQUIPMENT	15800
15.41	EVAPORATIVE COOLER	15800
15.53	MECHANICAL DUCT WORK	15800
15.55	MECHANICAL GRILLE - PAINTED	15800

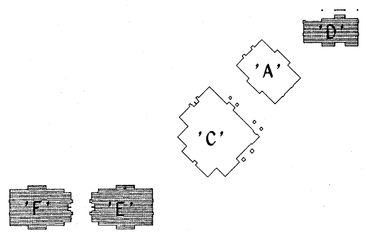

KEY PLAN

KLASSEN CORPORATION

Architecture
Planning
Construction

2021 Westwind Drive
Bakersfield, CA 93301
(805) 327-0875
(805) 327-5933 Fax

LICENSED ARCHITECT
L. WILL KLASSEN
C10401
REN 1-31-95
STATE OF CALIFORNIA

The above drawings and specifications and ideas, designs and arrangements represented thereby are and shall remain the property of the architect: and no part thereof shall be copied, disclosed to others or used in connection with any work or project other than the specific project for which they have been prepared and developed without the written consent of the architect. Visual contact with these drawings or specifications shall constitute conclusive evidence of acceptance of these restrictions.
Written dimensions on these drawings shall have precedence over scaled dimension: contractors shall verify and be responsible for, all dimensions and conditions on the job and this office must be notified of any variations from the dimensions and conditions shown by these drawings. Shop details must be submitted to this office for approval before proceeding with fabrication.

BAKERSFIELD CITY SCHOOL DISTRICT

MESA MARIN ELEMENTARY SCHOOL

BAKERSFIELD, CA.

Sheet title:
INTERMEDIATE, PRIMARY & KINDERGARTEN CLASSROOMS SECTIONS - 'D', 'E' & 'F'

Date:	Issued for:

Date:	Revisions:
10.94	A AS BUILTS

Drawn by: done

Job no: 1223

Dgn. file: mma25.2d

Sheet:
A.25
Sheet of: 30

Date: March 8, 1993

OFFICE OF THE STATE ARCHITECT
ACCESS COMPLIANCE SECTION
MAR 1 0 93

DSA
MAR 11 1993
Division of Safety Section