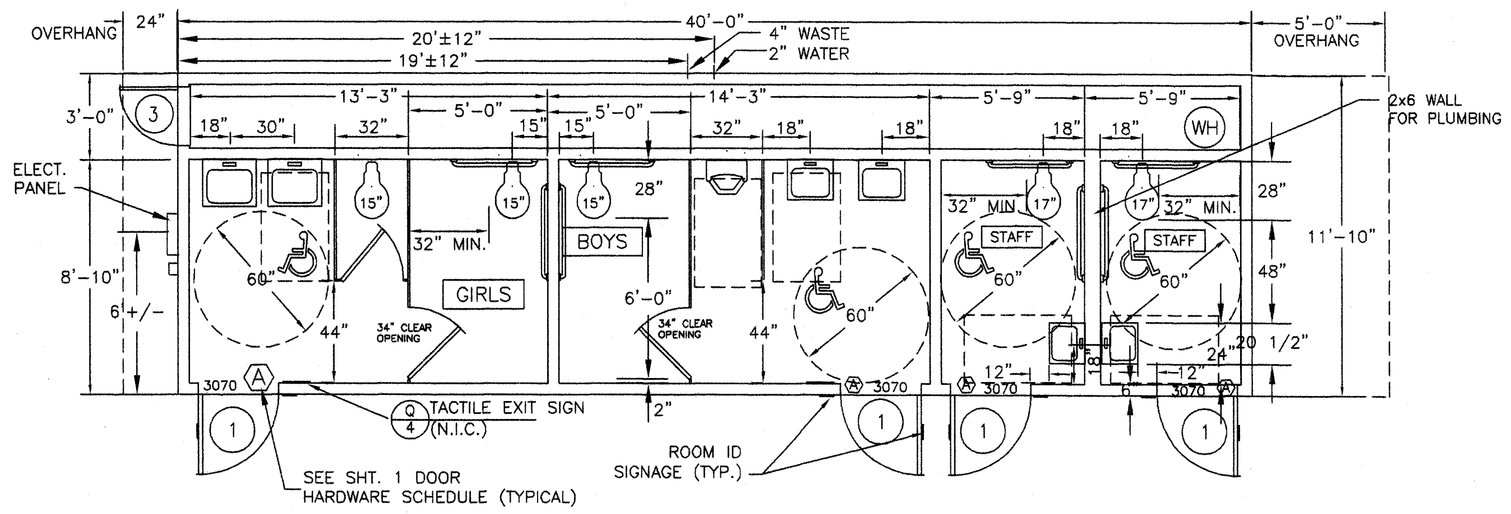

FLOOR PLAN BAKERSFIELD

SCALE: 1/4"=1'-0"

THESE DRAWINGS AND / OR SPECIFICATIONS AND / OR CALCULATIONS FOR THE ITEMS LISTED BELOW HAVE BEEN PREPARED BY OTHER DESIGN PROFESSIONALS WHO ARE LICENSED AND AUTHORIZED TO PREPARE SUCH DRAWINGS IN THIS STATE. THESE DOCUMENTS HAVE BEEN EXAMINED AND HAVE BEEN FOUND TO MEET THE APPROPRIATE REQUIREMENTS OF TITLE 24, CALIFORNIA CODE OF REGULATIONS AND THE PROJECT SPECIFICATIONS

THE ITEMS LISTED BELOW ARE ACCEPTABLE FOR INCORPORATION INTO THE CONSTRUCTION OF THIS PROJECT FOR WHICH I AM THE INDIVIDUAL DESIGNATED TO BE GENERALLY RESPONSIBLE (OR FOR WHICH I HAVE BEEN DELEGATED RESPONSIBILITY) FOR THIS PORTION OF THE WORK.

A LIST OF ITEMS HAS BEEN REVIEWED AND ACCEPTED. (FOR DRAWINGS, A LIST OF ALL ACCEPTED DRAWINGS ARE ATTACHED, SEE SHEET NO. 75-7).

REGISTERED ARCHITECT STEPHEN J. COSTELLO No. C-26236 STATE OF CALIFORNIA

STEPHEN J. COSTELLO, AIA

DATE

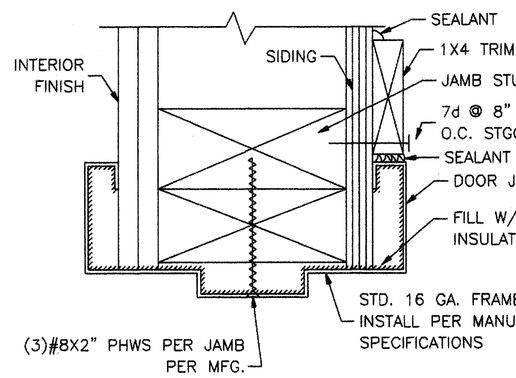

TYPICAL EXTERIOR DOOR JAMB (5/1)

NO SCALE

NOTE: SEE MANUFACTURES SPECS FOR INSTALLATION.

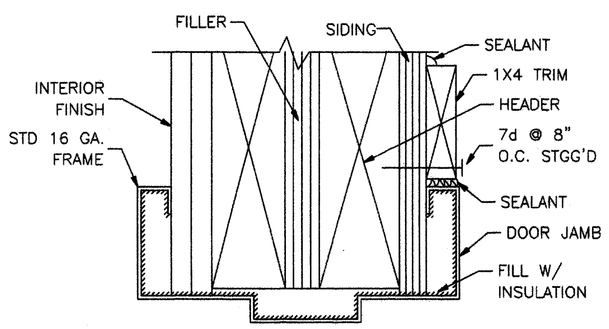

TYPICAL EXTERIOR DOOR HEAD (6/1)

NO SCALE

NOTE: SEE MANUFACTURES SPECS FOR INSTALLATION.

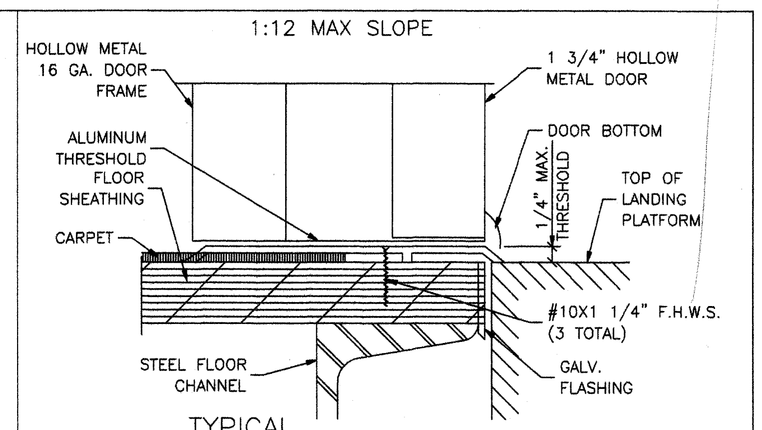

TYPICAL EXTERIOR DOOR SILL (4/1)

NO SCALE

NOTES

INTERIOR

1. Floor: Carpets – Units shall be carpeted as indicated on floor plan with direct glue down type per State of California Specification 7220-XXX-01, Group 1, Type A, Class 26. Color will be selected by District after award of bid. The carpet density shall be 4600 minimum. Pile yarn shall be branded nylon. No cross seams shall be allowed.

1a. Restroom Floor: Armstrong sheet vinyl or equal.

3. Interior walls shall be vinyl covered tackboard U.N.O. applied in one continuous length from floor to ceiling. The tackboard shall be industrial insulation board manufactured specifically as a substitute for vinyl covered wall panels. The board shall be asphalt free, shall have an ironed-on coating and shall have a minimum density of 18 lbs. per ft. The vinyl coating shall be made of virgin vinyl calendered base color, weighing a minimum of 8 oz. per square yard. The coating backing shall be sheeting or non-woven fabric. The vinyl coating shall be mechanically laminated, with the long edges wrapped, to the tackboard. Tackboard shall be applied over 1/2" sheetrock or 3/8" plywood sheathing. The vinyl wall covered panel shall have a Class III flame spread rating. The panel shall be approved for classroom use by The California State Fire Marshal. Reference brand: Vinyl covered tackboard as manufactured by Chatfield-Clarke or comparable. Care shall be taken in mounting the tackboard so that the texture of all panels will have the same orientation and color match.

3a. Interior restroom walls shall be F.R.P. U.N.O.

4. Ceiling: Suspend T-Bar System, see sheet 3 for details etc. Materials and installation per CBC 2501.A.5 and IR #M-3 inclusive as applicable to classrooms.

DOORS

Exterior Doors: Insulated Metal Doors – 3'-0"X7'-0" hollow metal door construction of 1 sheet of 18 ga. steel assembled per CS242 min and reinforced.
(Reinforce both faces for closure)
provide flush top on doors. Hardware reinforcement shall be 10 ga. min for hinges, door frame shall be 16 ga. pressed steel frame ASTM A366 & C5242. Hardware reinforcement shall be 10 ga. plate. Frames shall be designed with integral stop and trim. Provide (3) anchors per jamb.

Interior Doors: 3'-0"x7'-0" Birch-clear finish solid core doors.

Exterior Windows: Provide anodized aluminum frame 5/8" minimum dual pane window units, as shown on floor plans. The 5/8" dimension is the minimum thickness for the dual glazed window panel consisting of two lights of glass and the air space. Glazing material shall be:

Exterior Lite – 3/16" minimum tempered glass or laminated as – 1 glass of solar gray glare reducing type with a light transmission factor of 45% maximum.

DOOR HARDWARE SCHEDULE

A	EXTERIOR DOOR LOCKSET W/ LEVER RHODES SCHLAGE 07080
B	INTERIOR PASSAGE LOCK SCHLAGE AL10 W/ SATURN LEVER
C	INTERIOR PRIVACY LATCH SCHLAGE A40S W/ SATURN LEVER

Exterior Door
A) Hinges: Hager 4-1/2X4-1/2 butts, BB1279 US260,1-1/2 pair each door with set screw in barrel and ball bearing design
C) Closer: Norton 7500 series door closer capable of 190 degree opening. (5 lbs. max. pressure)
D) Weatherstripping: All exterior doors shall be weatherstripped with Pemko 288D, Ultra WS007, at door jambs and head or equal.
E) Threshold: Threshold shall be Pemko 271 AV 5" aluminum with Pemko 216 AV Ultra TH042 door bottom.
F) Doorstop: Quality #44, or equal.

IDENTIFICATION STAMP
DIV. OF THE STATE ARCHITECT

APP03- 104224

AC NW FLS EV SS MC

DATE JAN 27 2006

BASED ON PC 02-104931

FILE NO.

IDENTIFICATION STAMP
DIV. OF THE STATE ARCHITECT
OFFICE OF REGULATION SERVICES

AC.____ FLS.____ SS.____

DATE_____

12 X 40
RELOCATABLE
BUILDING

AMS
American Modular Systems Inc.
787 Spreckels Ave. Manteca, CA 95336
(209)825-1921 Fax (209)8254018
americanmodular.com

LICENSED ARCHITECT NIGEL PATRICK CONNAUGH No. C 12631 Exp. 3-31-05 STATE OF CALIFORNIA

CUSTOMER:
BAKERSFIELD CITY SCHOOL DISTRICT
CHIPMAN JUNIOR HIGH SCHOOL

FLOOR PLAN & NOTES

DATE: 01-25-05
SCALE: NONE
DRAWN BY: Y.A./M.P.
CHECKED BY:
CHECKED BY:
SERIAL NO.

REVISIONS

NO	DATE	DESCRIPTION	NO	DATE	DESCRIPTION
△			△		
△			△		
△			△		
△			△		

PROJECT No.

SHEET No. 1