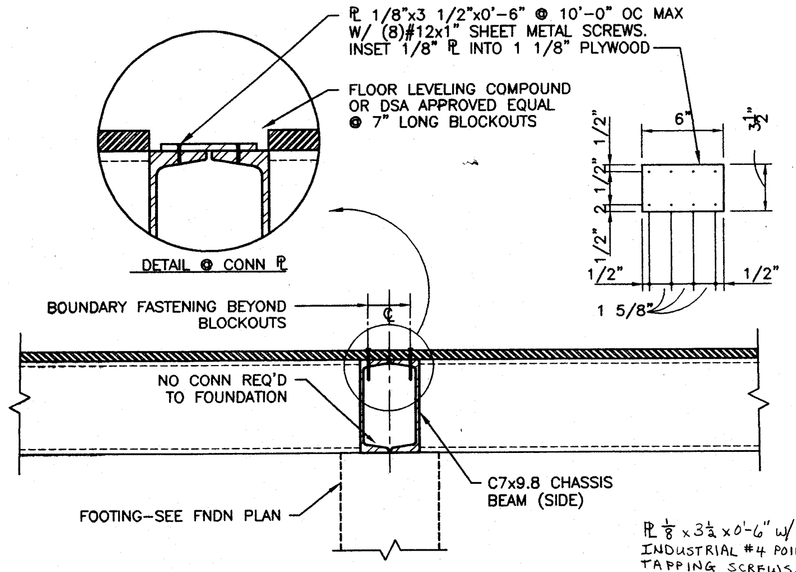

5/S2 DETAIL
1 1/2" = 1'-0"

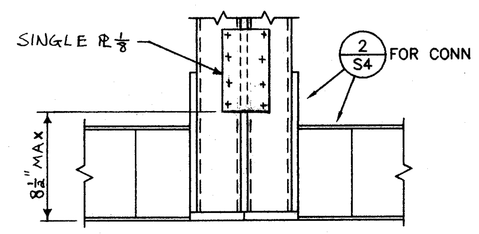

SECTION 2A

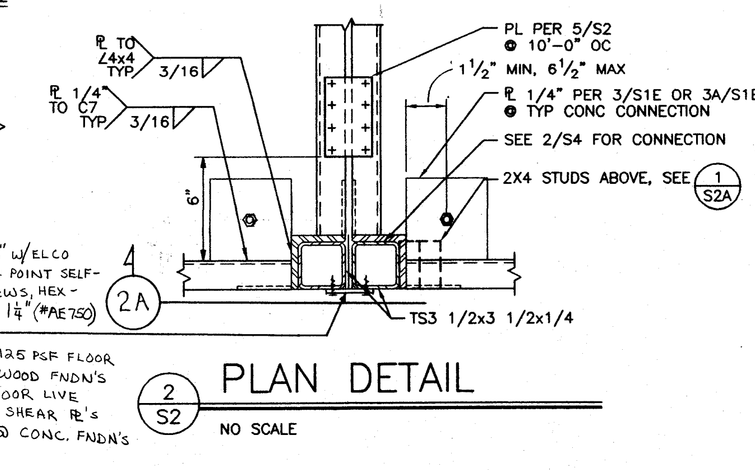

2/S2 PLAN DETAIL
NO SCALE

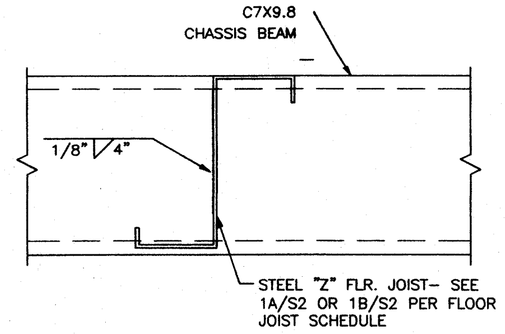

1/S2 DETAIL
NO SCALE

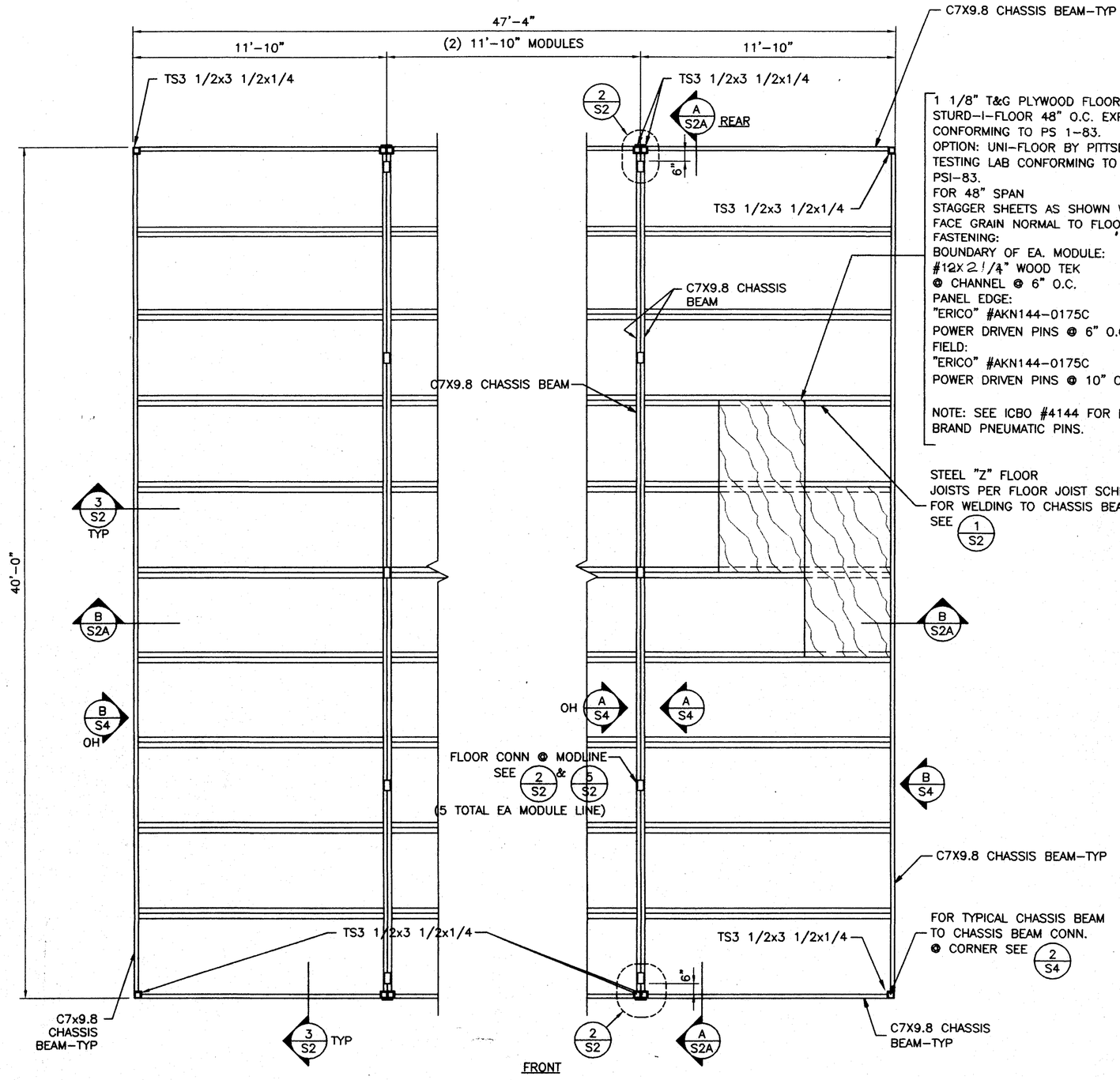

NOTES:
1. SEE SHEET S4 FOR TYPICAL WALL FRAMING.

A/S2 FLOOR FRAMING PLAN
1/4" = 1'-0"

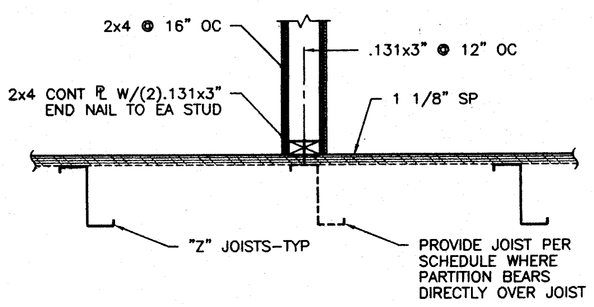

TYP INTR NON-BEARING WALL BASE
6/S2 DETAIL
1" = 1'-0"

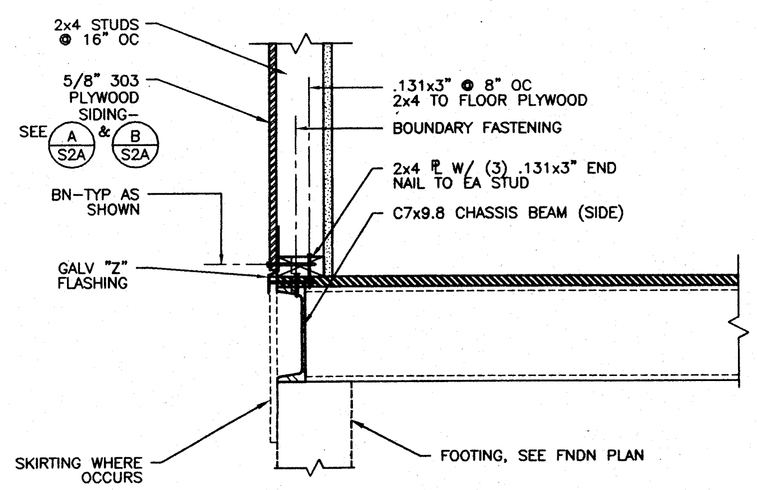

3/S2 DETAIL
1 1/2" = 1'-0"

Z SECTION PROPERTIES
A=0.91 IN^2
SX=1.84 IN^3
IX=6.25 IN^4

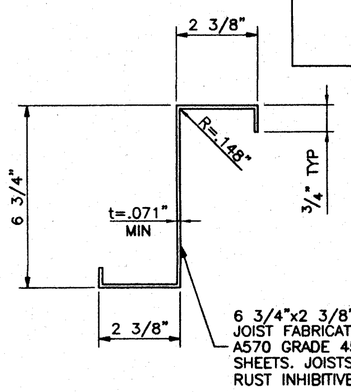

14 GA JOIST
1A/S2 DETAIL
NO SCALE

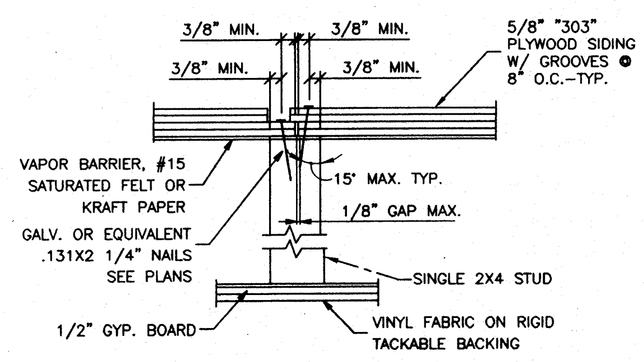

TYPICAL SIDING JOINT
4/S2 DETAIL
NO SCALE

Z SECTION PROPERTIES
A=1.36 IN^2
SX=2.70 IN^3
IX=8.77 IN^4

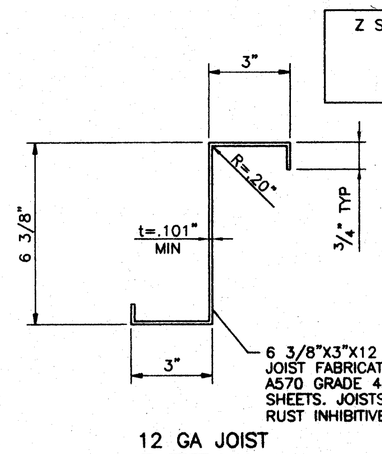

12 GA JOIST
1B/S2 DETAIL
NO SCALE

FLOOR JOIST SCHEDULE

LIVE LOAD	SPACING	
	14 GA JOIST	12 GA JOIST
50 PSF	48" OC	48" OC
100 PSF	24" OC	24" OC
125 PSF	–	24" OC

NOTES:
1. FOR JOISTS SEE 1A/S2 AND 1B/S2
2. SPACING IS TO CENTER LINE OF TOP FLANGE.
3. PROVIDE 12 GA JOIST WHERE PARTITION BEARS DIRECTLY OVER JOIST.

THESE DRAWINGS AND / OR SPECIFICATIONS AND / OR CALCULATIONS FOR THE ITEMS LISTED BELOW HAVE BEEN PREPARED BY OTHER DESIGN PROFESSIONALS WHO ARE LICENSED AND AUTHORIZED TO PREPARED SUCH DRAWINGS IN THIS STATE. THESE DOCUMENTS HAVE BEEN EXAMINED BY ME AND HAVE BEEN FOUND TO MEET THE APPROPRIATE REQUIREMENTS OF TITLE 24, CALIFORNIA CODE OF REGULATIONS AND THE PROJECT SPECIFICATIONS PREPARED BY ME.
THE ITEMS LISTED BELOW ARE ACCEPTABLE FOR INCORPORATION INTO THE CONSTRUCTION OF THIS PROJECT FOR WHICH I AM THE INDIVIDUAL DESIGNATED TO BE IN GENERAL RESPONSIBLE CHARGE (OR FOR WHICH I HAVE BEEN DELIGATED RESPONSIBILITY FOR THIS PORTION OF THE WORK).
A LIST OF ITEMS HAVE BEEN REVIEWED AND ACCEPTED. (FOR DRAWINGS, A LIST OF ALL ACCEPTED DRAWINGS ARE ATTACHED. SEE SHEET NO.).

LICENSED ARCHITECT STEPHEN J. COHEN No. C-16788 REN. 11/30/01 STATE OF CALIFORNIA

Stephen J. Cohen, RCARB/AIA DATE 8/23/00

LICENSE # C-16788

EXP. DATE 11/30/01

IDENTIFICATION STAMP DIV. OF THE STATE ARCHITECT
APPL. 0 2 2
AC. FLS. SS
DATE

FILE NO. PC
IDENTIFICATION STAMP DIV. OF THE STATE ARCHITECT OFFICE OF REGULATION SERVICES
APPLICATION NO. 02-101835
AC. FLS. SS
DATE JAN 1 2 2000
REV. 4-10-00

48 x 40
RELOCATABLE
CLASSROOM

American Modular Systems

REGISTERED PROFESSIONAL ENGINEER Kenneth A. Luttrell No. 1418 EXP. 3-31-01 Structural Engineer STATE OF CALIFORNIA

CUSTOMER:

FLOOR FRAMING PLANS AND DETAILS

DATE: 12/27/99
SCALE: AS NOTED
DRAWN BY: PWD
DESIGNED BY: MDB
CHECKED BY: KAL
SERIAL NO.

REVISIONS

NO	DATE	DESCRIPTION	NO	DATE	DESCRIPTION

PROJECT No. 99108

SHEET No. S2

M:\99108\ACAD\STRU\S2.dwg 10-18-99 11:26:53 am EST