ANCHOR TYPE	HILTI KWIK BOLT II ICBO # 4627	
MATERIAL	NEW CONCRETE f'c- 2000 PSI	
ANCHOR SIZE (IN)	1/2"ø	5/8"ø
MIN EMBED (IN)	3 1/2"	4"
* TENSION TEST (LB)	2800#	3490#
TORQUE TEST (FT-LB)	50	50

* TENSION TEST- 1.6 x ALLOWABLE TENSILE LOAD PER IR 19-1

12 S1E ANCHOR BOLT SCHEDULE DETAIL
NO SCALE

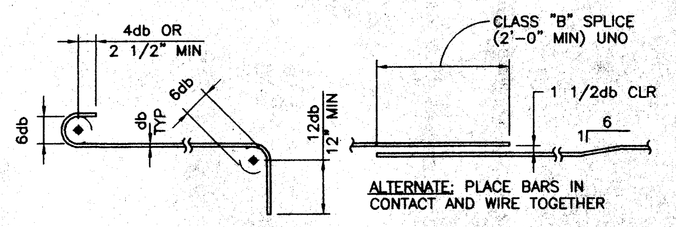

8 S1E TYPICAL REINFORCING BENDS DETAIL
1" = 1'-0"

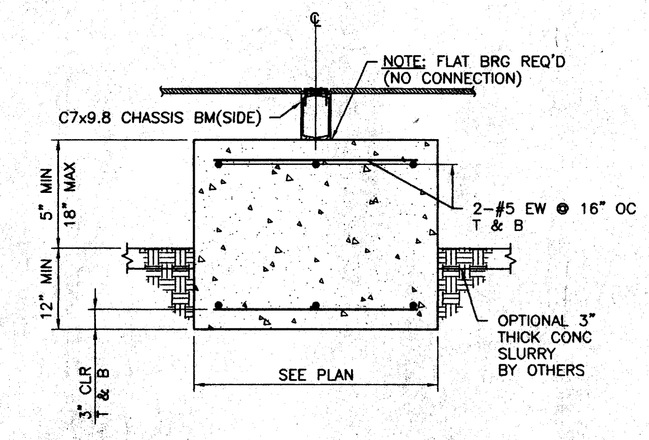

4 S1E SECTION
3/4" = 1'-0"

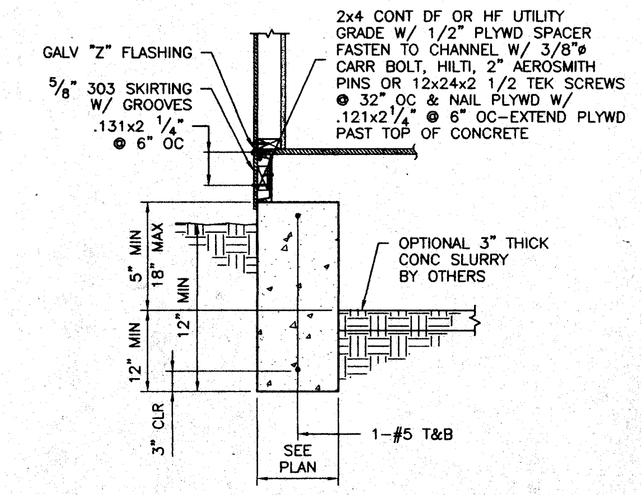

1 S1E ABOVE GRADE SECTION
3/4" = 1'-0"

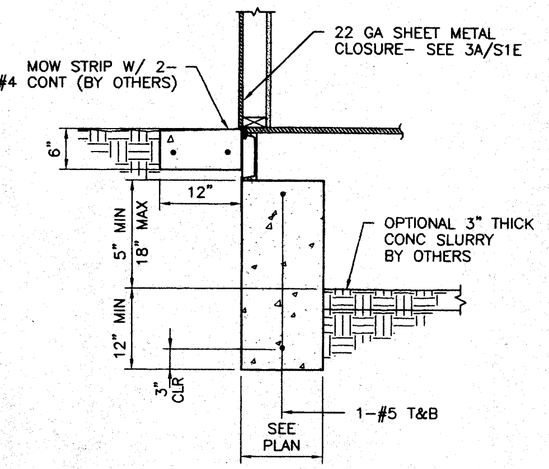

1A S1E BELOW GRADE SECTION
3/4" = 1'-0"

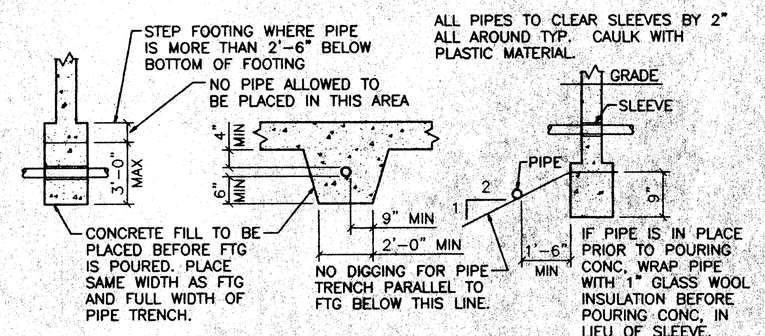

9 S1E PIPE SLEEVE DETAIL
1/2"=1'-0"

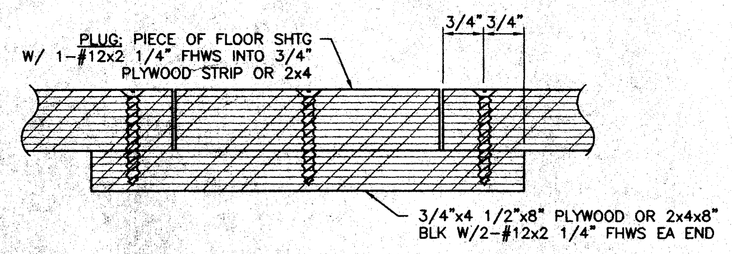

5 S1E FILLER ACCESS HOLE DETAIL
NO SCALE

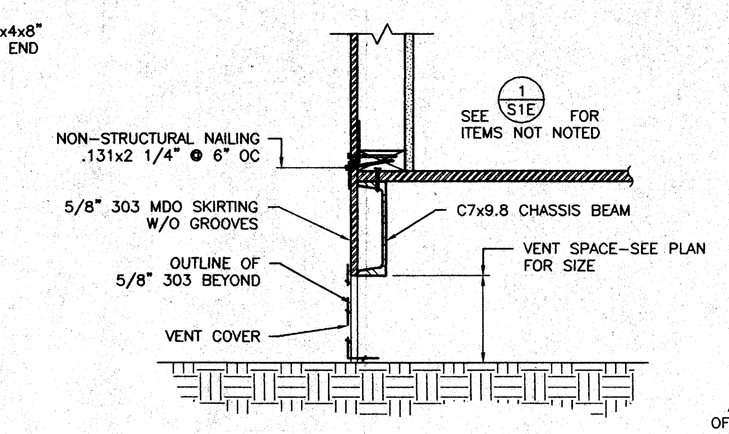

2 S1E ABOVE GRADE DETAIL
1 1/2" = 1'-0"

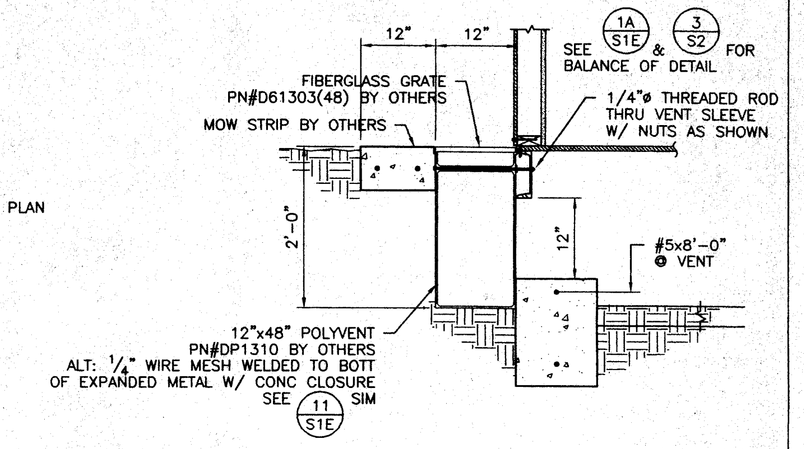

2A S1E BELOW GRADE DETAIL
3/4" = 1'-0"

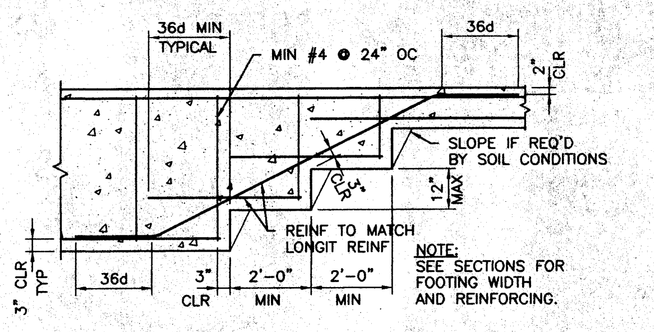

10 S1E STEPPED FOOTING DETAIL
3/8" = 1'-0"

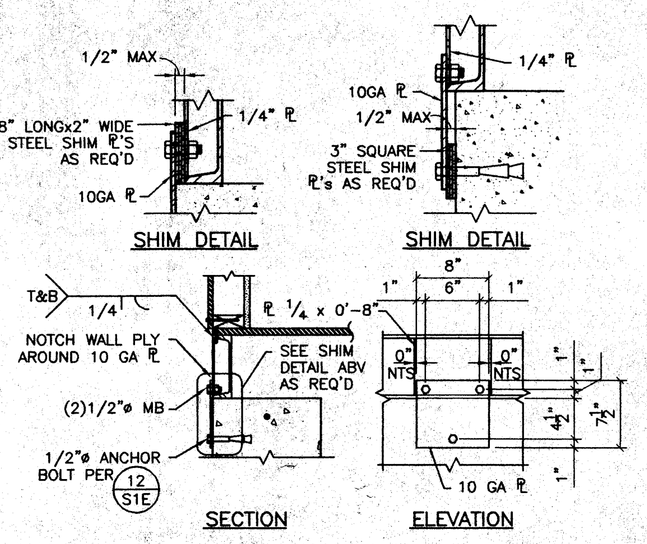

6 S1E ALTERNATE SHEAR PLATE DETAIL
1" = 1'-0"

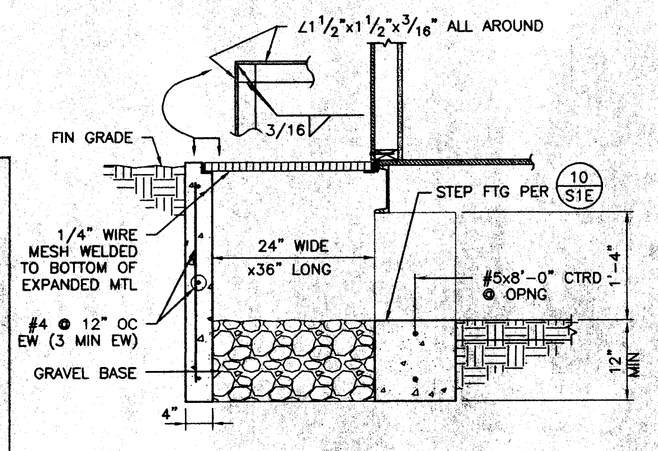

11 S1E OPTIONAL FOUNDATION ACCESS SECTION
3/4" = 1'-0"

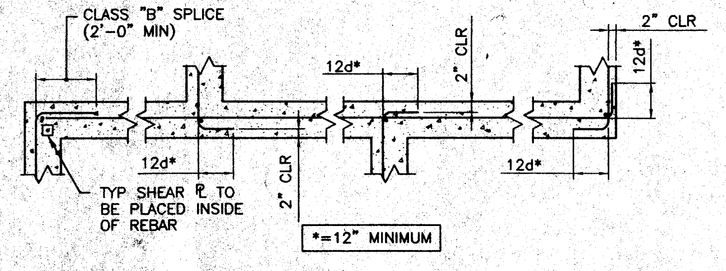

7 S1E TYP WALL & FTG REINF SPLICES DETAIL
NO SCALE

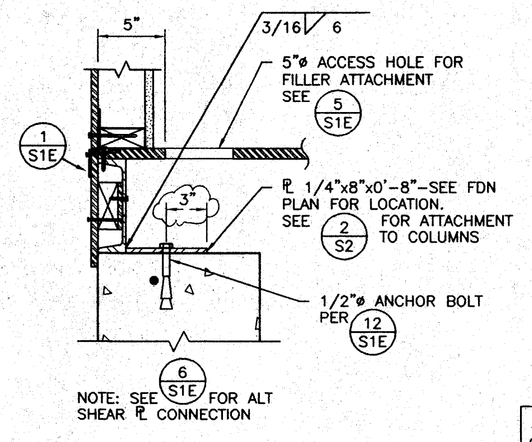

3 S1E ABOVE GRADE SECTION
1 1/2" = 1'-0"

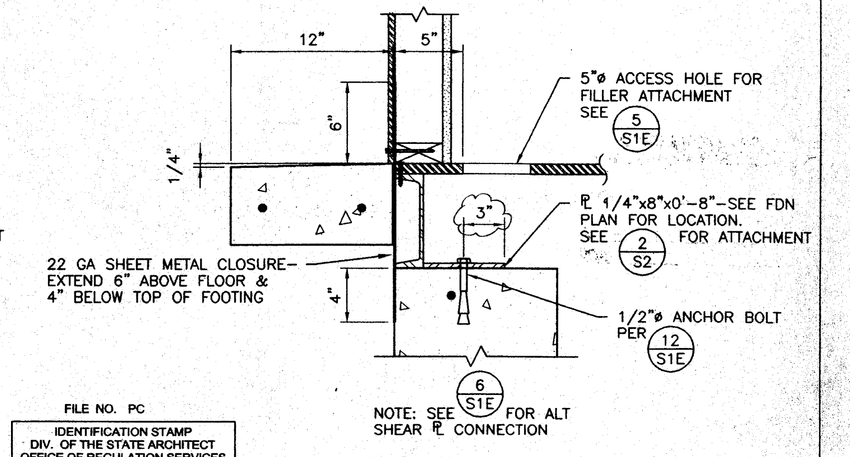

3A S1E BELOW GRADE SECTION
1 1/2" = 1'-0"

IDENTIFICATION STAMP
DIV. OF THE STATE ARCHITECT
APPROVED
AC FLS SS
DATE

THESE DRAWINGS AND / OR SPECIFICATIONS AND / OR CALCULATIONS FOR THE ITEMS LISTED BELOW HAVE BEEN PREPARED BY OTHER DESIGN PROFESSIONALS WHO ARE LICENSED AND AUTHORIZED TO PREPARED SUCH DRAWINGS IN THIS STATE. THESE DOCUMENTS HAVE BEEN EXAMINED BY ME AND HAVE BEEN FOUND TO MEET THE APPROPRIATE REQUIREMENTS OF TITLE 24, CALIFORNIA CODE OF REGULATIONS AND THE PROJECT SPECIFICATIONS PREPARED BY ME.
THE ITEMS LISTED BELOW ARE ACCEPTABLE FOR INCORPORATION INTO THE CONSTRUCTION OF THIS PROJECT FOR WHICH I AM THE INDIVIDUAL DESIGNATED TO BE IN GENERAL Rresponsible CHARGE (OR FOR WHICH I HAVE BEEN DELEGATED RESPONSIBILITY FOR THIS PORTION OF THE WORK).
A LIST OF ITEMS HAVE BEEN REVIEWED AND ACCEPTED. (FOR DRAWINGS, A LIST OF ALL ACCEPTED DRAWINGS ARE ATTACHED. SEE SHEET NO.).

LICENSED ARCHITECT STEVEN J. COBB No. C-16788 EXP. 11/30/01 STATE OF CALIFORNIA

Steven J. Cobb, AIA DATE 8/20/00
LICENSE # C-16788
EXP. DATE 11/30/01

FILE NO. PC
IDENTIFICATION STAMP
DIV. OF THE STATE ARCHITECT
OFFICE OF REGULATION SERVICES
APPLICATION NO. 02-101835
AC FLS SS
DATE JAN 12 2000

48 x 40
RELOCATABLE
CLASSROOM

American Modular Systems

REGISTERED PROFESSIONAL ENGINEER Kenneth A. Luttrell No. 1418 EXP. 3-31-01 Structural Engineer STATE OF CALIFORNIA

CUSTOMER:

FOUNDATION DETAILS

DATE:	12/27/99
SCALE:	AS NOTED
DRAWN BY:	PWD
DESIGNED BY:	MDB
CHECKED BY:	KAL
SERIAL NO.	

REVISIONS

NO	DATE	DESCRIPTION	NO	DATE	DESCRIPTION

PROJECT No. 99108

SHEET No. S1E

M:\99108\ACAD\STRU\ S1e.dwg 10-18-99 2:15:21 pm EST