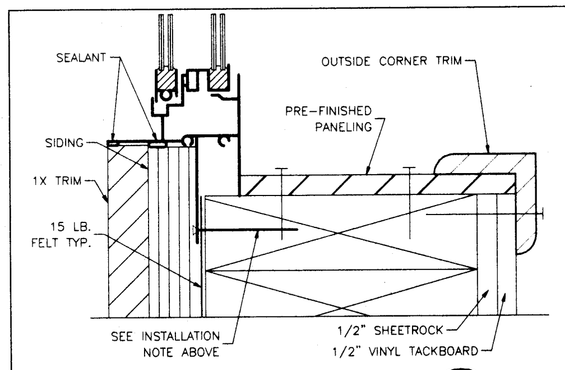

WINDOW SILL DETAIL (1/1)
NO SCALE

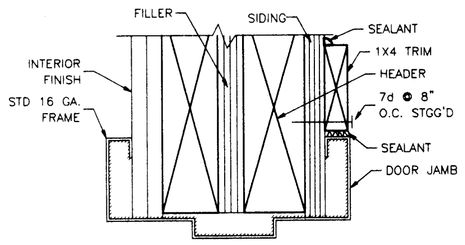

TYPICAL EXTERIOR DOOR HEAD (6/1)
NO SCALE

NOTE: SEE MANUFACTURES SPECS FOR INSTALLATION.

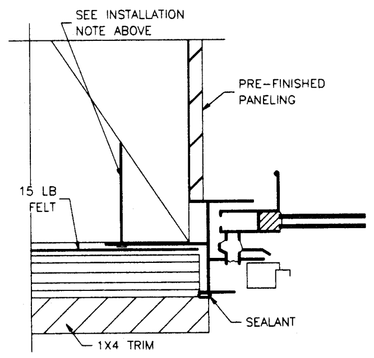

WINDOW JAMB (2/1)
NO SCALE

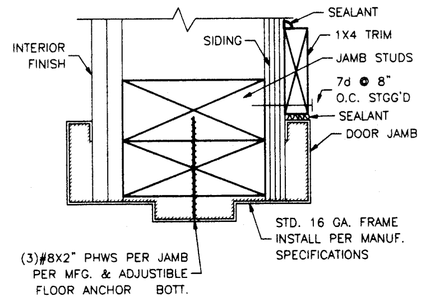

TYPICAL EXTERIOR DOOR JAMB (5/1)
NO SCALE

NOTE: SEE MANUFACTURES SPECS FOR INSTALLATION.

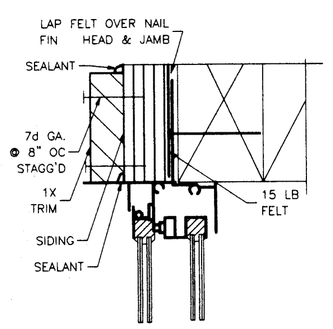

TYPICAL WINDOW HEAD (3/1)
NO SCALE

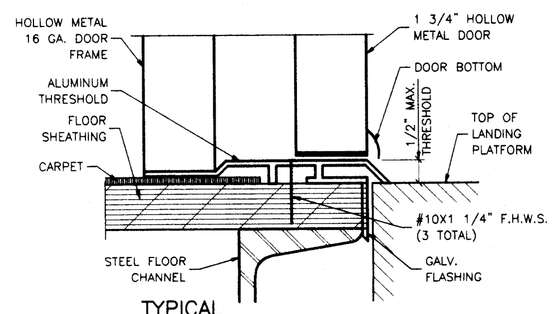

TYPICAL EXTERIOR DOOR SILL (4/1)
NO SCALE

CAPACITY POSTING
C.B.C. SECTION 1002.3
TITLE 19 C.C.R., SECTION 3.30
THIS ROOM SHALL BE POSTED WITH A DURABLE SIGN NEAR THE MAIN EXIT FROM THE ROOM. THE SIGN SHALL BE WORDED AS FOLLOWS:

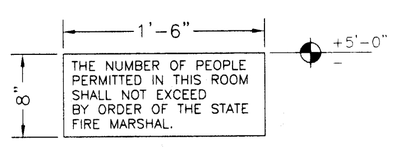

TYPESTYLE: 1" HIGH BLOCK
1/16" THICK ENGRAVED PLASTIC
MOUNTING: (4)#8x1" SCREWS.

OCCUPANT LOAD SIGN

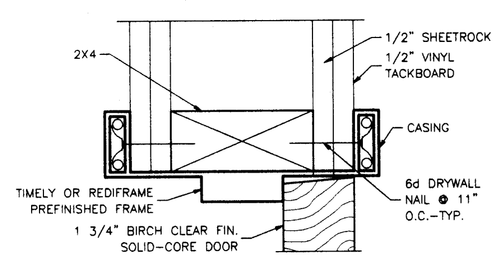

TYPICAL INTERIOR DOOR HEAD/JAMB (7/1)
NO SCALE

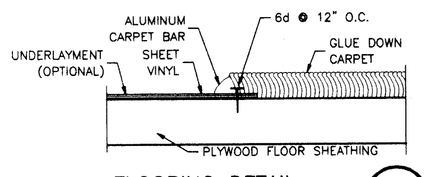

FLOORING DETAIL (8/1)
NO SCALE

TYPICAL EXTERIOR WINDOW INSTALLATION NOTE:
SEE MANUF. SPECS FOR INSTALLATION
USE .131" X 2 1/2 " @ 16" O.C. VERTICALS
USE .131" X 2 1/2" @ 24" O.C. HORIZONTALS

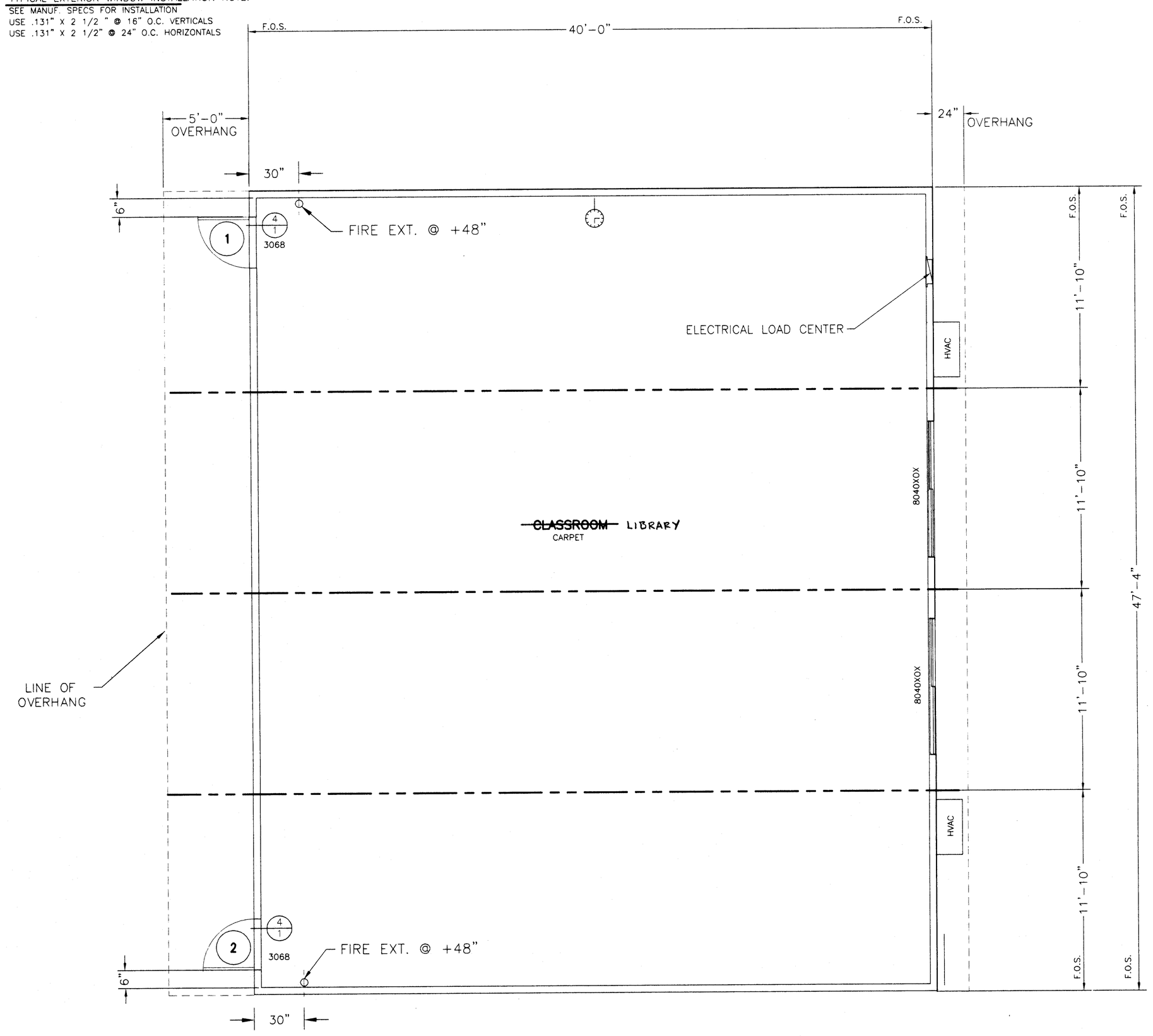

FLOOR PLAN
SCALE: 1/4"=1'-0"

NOTES
INTERIOR

1. Floor: Carpets – Units shall be carpeted as indicated on floor plan with direct glue down type per State of California Specification 7220-XXX-01, Group 1, Type A, Class 26. Color will be selected by Architect after award of bid. The carpet density shall be 4600 minimum. Pile yarn shall be branded nylon. No cross seams shall be allowed.

2. Base: Resilient Cove Base – Best quality, moulded rubber, 1/8" thick, 4" high, moulded top set Cove: Provide preformed base for square external corners and preformed end stops where base does not abut. Solid color as manufactured by "Johnsonite Co." , Flexco, or equal. Apply cove to complete perimeter of classroom.

3. Interior walls shall be vinyl covered tackboard(u.o.n.) applied in one continuous length from floor to ceiling. The tackboard shall be industrial insulation board manufactured specifically as a substitute for vinyl covered wall panels. The board shall be asphalt free, shall have an ironed-on coating and shall have a minimum density of 18 lbs. per ft. The vinyl coating shall be made of virgin vinyl calendered base color, weighing a minimum of 8 oz. per square yard. The coating backing shall be sheeting or non-woven fabric. The vinyl coating shall be mechanically laminated, with the long edges wrapped, to the tackboard. Tackboard shall be applied over 1/2" sheetrock or plywood sheathing. The vinyl wall covered panel shall have a Class III flame spread rating. The panel shall be approved for classroom use by The California State Fire Marshal. Reference brand: Vinyl covered tackboard as manufactured by
Chatfield-Clarke or comparable. Care shall be taken in mounting the tackboard so that the texture of all panels will have the same orientation and color match.

4. Ceiling: Suspend T-Bar System, see sheet 3 for details etc. Materials and installation per CCR 2501.A.5 and IR #47-4 inclusive as applicable to classrooms.

DOORS & WINDOWS

Exterior Doors: Metal Doors – 3'0X6'8 hollow metal door construction of 1 sheet of 18 ga. steel assembled per CS242 min and reinforced with 20 ga. min. continuous vertical steel stiffeners spaced @ 6" O.C. Fill spaces between stiffeners with mineral wool or other insulation. (Reinforce both faces for closure) provide flush top on doors. Hardware reinforcement shall be 10 ga. min for hinges, door frame shall be 16 ga. pressed steel frame ASTM A366 & C5242. Hardware reinforcement shall be 10 ga. plate. Frames shall be designed with integral stop and trim. Provide (3) anchors per jamb plus adjustable floor anchor.

Exterior Windows: Provide anodized aluminum frame 5/8" minimum dual pane window units, as shown on floor plans. The 5/8" dimension is the minimum thickness for the dual glazed window panel consisting of two lights of glass and the air space. Glazing material shall be:

Exterior Lite – 3/16" minimum tempered glass or laminated as – 1 glass of solar gray glare reducing type with a light transmission factor of 45% maximum.

Interior Lite – 1/8" minimum clear tempered.

Minimum air space shalle be 1/4".

Space – Bent or sealed corner aluminum with desiccant fill

Sealer – Butyl primary seal and polysulfide of silicone secondary seal.

Certification – All glazing to be certified in accordance with ASTM E-773, E-774.

Header height shall be the same as the door. All operable sash shall have aluminum screens. Windows shall not be mounted to the exterior plywood surface. All windows shall meet the AAMA GS101-88 voluntary spec. For aluminum prime windows and sliding glass (ANS1), commercial grade.

HARDWARE

1. Exterior Door
   A) Hinges: Hager 4-1/2X4-1/2 butts, BB1279 US26D,1-1/2 pair each door with set screw in barrel and ball bearing design, or approved equal.
   B) Lockset: Doors 1&2 ext. Classroom lever handle lockset, panic bar type, Von Duprin 22L (lever on ext.) or Corbin or Yale or equivalent. ALUM. finish.
   C) Closer: Norton 7500DA 170° OPENING
   D) Weatherstripping: All exterior doors shall be weatherstripped with Pemko 299D, Ultra WS007, at door jambs and head or equal.
   E) Threshold: Threshold shall be Pemko 271 AV 5" aluminum with Pemko 216 AV Ultra TH042 door bottom.
   F) Doorstop: Quality #44, or equal.

FIRE EXTINGUISHER

1. Each portable classroom shall be equipped with pressure type fire extinguishers with 2A10BC UL rating. To be mounted on the interior wall of the building near the doorway(s) at a height of 4 feet to mounting bracket. Fire extinguishers shall be totally charged and have a dial indicating the state of charge.

CHALKBOARD SPECIFICATIONS

Chalkboards shall have green facing sheet suitable to accept white or yellow chalk and felt erasers.

Markerboards shall be 5 mil thick melamine facing sheet suitable to accept dry erase felt markers. The facing sheet shall be laminated, using hot melt adhesive, to a medium density particleboard substrate with a minimum density of 45#/c. ft. The panel shall have a foil backing. The panels shall have extruded aluminum molding and chalkrail with a minimum of 2-15/16" projection from the face of the panel. A full length map rail shall be provided with cork insert and end stops. The map rail and chalkrail are to incorporate a channel to wrap around the panel. Three (3) map hooks, with clips, pergonel shall be provided. One flag holder, 1/2" size, shall be provided for each classroom. Each classroom shall be 2 ea. 4x8 panels installed side by side to make a 4x16 panel, centered on one of the long walls. Referenced brand: Chatfield-Clarke Co. series 500. Attach directly to studs and blocking W/#8x3" oval head wood screw @ 32" o.c. horizontally and @ 24" o.c. vertically.

THESE DRAWINGS AND / OR SPECIFICATIONS AND / OR CALCULATIONS FOR THE ITEMS LISTED BELOW HAVE BEEN PREPARED BY OTHER DESIGN PROFESSIONALS WHO ARE LICENSED AND AUTHORIZED TO PREPARED SUCH DRAWINGS IN THIS STATE. THESE DOCUMENTS HAVE BEEN EXAMINED BY ME AND HAVE BEEN FOUND TO MEET THE APPROPRIATE REQUIREMENTS OF TITLE 24, CALIFORNIA CODE OF REGULATIONS AND THE PROJECT SPECIFICATIONS PREPARED BY ME.
THE ITEMS LISTED BELOW ARE ACCEPTABLE FOR INCORPORATION INTO THE CONSTRUCTION OF THIS PROJECT FOR WHICH I AM THE INDIVIDUAL DESIGNATED TO BE IN GENERAL RESPONSIBLE CHARGE (OR FOR WHICH I HAVE BEEN DELIGATED RESPONSIBILITY FOR THIS PORTION OF THE WORK)
A LIST OF ITEMS HAVE BEEN REVIEWED AND ACCEPTED. (FOR DRAWINGS, A LIST OF ALL ACCEPTED DRAWINGS ARE ATTA[illegible] SHEET NO. [illegible]).

LICENSED ARCHITECT STEPHEN J. CORBIN No.C-16788 EXP. 11/30/01 STATE OF CALIFORNIA

Stephen J. Corbin, RCAHE, AIA DATE [illegible]
LICENSE # C-16788
EXP. DATE 11/30/01

FILE NO. 15-6
IDENTIFICATION STAMP
DIV. OF THE STATE ARCHITECT
OFFICE OF REGULATION SERVICES
APPL. 03-104224
AC[illegible] FLS[illegible] SS[illegible]
DATE

48 X 40 PC
RELOCATABLE
CLASSROOMS

American Modular Systems

CUSTOMER:
BAKERSFIELD CITY SCHOOL DISTRICT
NOBLE LIBRARY BUILDING

FLOOR PLAN & NOTES

DATE: 06-12-00
SCALE: NONE
DRAWN BY: R.S.
CHECKED BY:
CHECKED BY:
SERIAL NO.

REVISIONS

NO	DATE	DESCRIPTION	NO	DATE	DESCRIPTION

PROJECT No.

SHEET No. 1