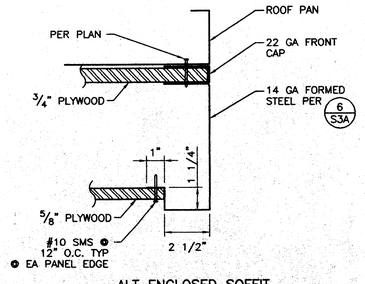

ALT ENCLOSED SOFFIT W/ PLYWOOD DECKING
DETAIL
5/S3A
3" = 1'-0"

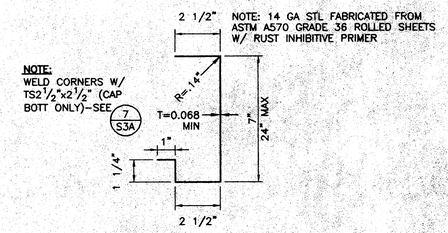

14 GA FORMED STEEL CEE ALT ENCLOSED SOFFIT
DETAIL
6/S3A
3" = 1'-0"

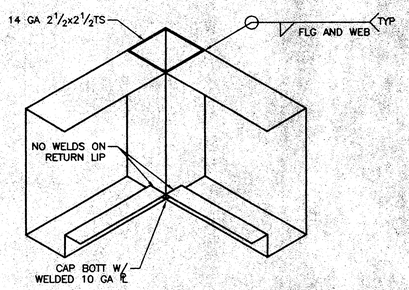

ALT ENCLOSED SOFFIT STL PROFILE
DETAIL
7/S3A
NO SCALE

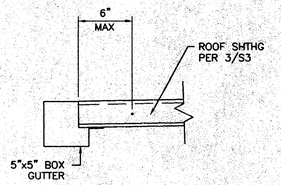

DETAIL
8/S3A
NO SCALE

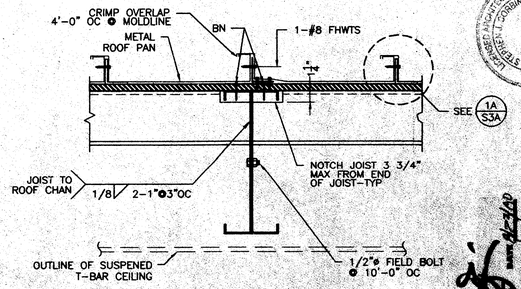

ALT W/ ROOF PLYWOOD SHTHG
DETAIL
3A/S3A
1 1/2" = 1'-0"

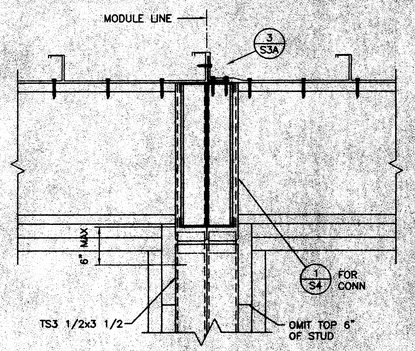

DETAIL
4/S3A
1 1/2" = 1'-0"

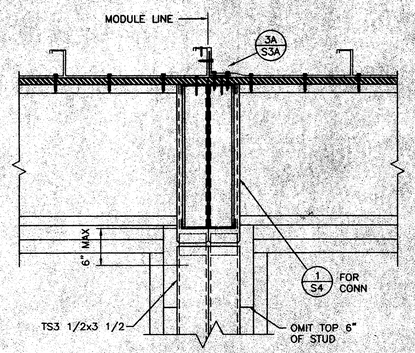

ALT W/ PLYWOOD DECKING
DETAIL
4A/S3A
1 1/2" = 1'-0"

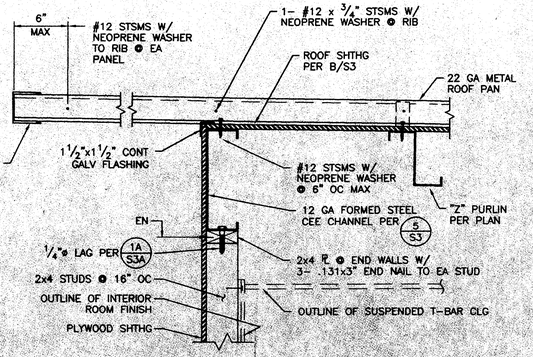

ALT W/ PLYWOOD SHTHG (2'-0" OVERHANG DETAIL SIM)
5'-0" OVERHANG DETAIL
2A/S3A
1 1/2" = 1'-0"

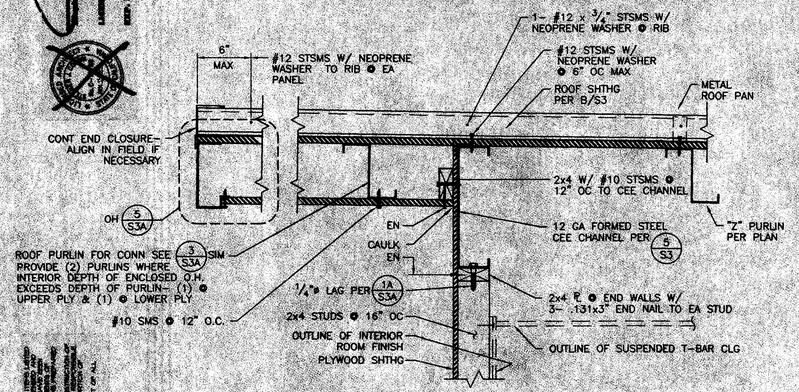

ALTERNATE ENCLOSED SOFFIT & ROOF PLYWOOD (2'-0" OVERHANG DETAIL SIM)
5'-0" OVERHANG DETAIL
2B/S3A
1 1/2" = 1'-0"

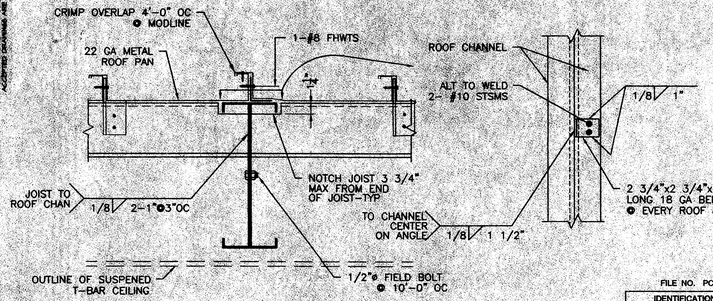

DETAIL
3/S3A
1 1/2" = 1'-0"

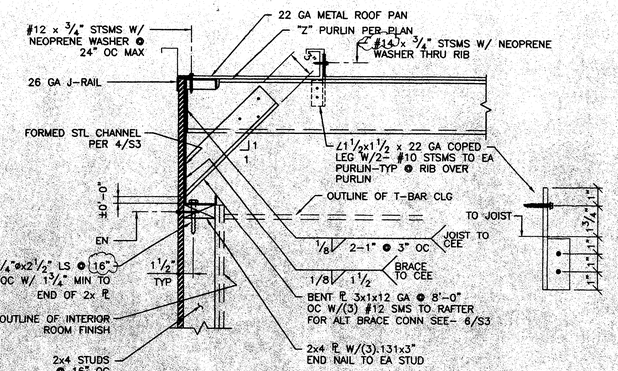

DETAIL
1/S3A
1 1/2" = 1'-0"

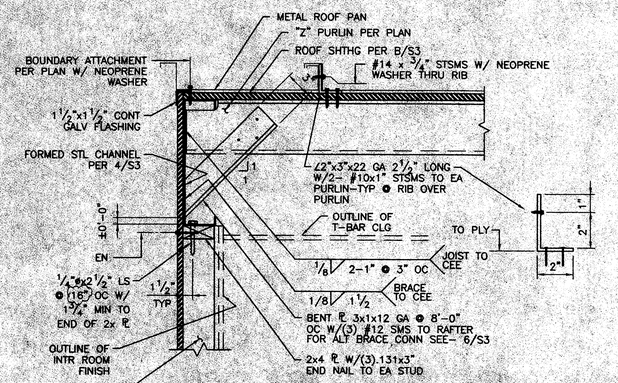

ALTERNATE ROOF W/ PLYWOOD SHEATHING
DETAIL
1A/S3A
1 1/2" = 1'-0"

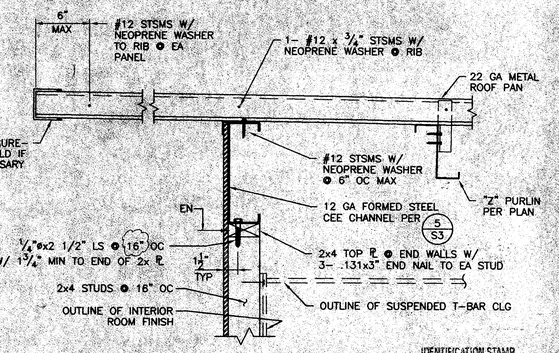

DETAIL
2/S3A
(2'-0" OVERHANG DETAIL SIM)
1 1/2" = 1'-0"

FILE NO. PC
IDENTIFICATION STAMP
DIV. OF THE STATE ARCHITECT
OFFICE OF REGULATION SERVICES
APPLICATION NO. 02-101 & 3-7
AC. FLS. SS.
DATE JAN 1 2 2000

IDENTIFICATION STAMP
DIV. OF THE STATE ARCHITECT
APPD3- 104221
AC. FLS SS
DATE MAR 04 2001

24 x 40
RELOCATABLE
CLASSROOM

American Modular Systems

REGISTERED PROFESSIONAL ENGINEER
Kenneth A. Luttrell
No. 1418
EXP. 3-31-01
Structural Engineer
STATE OF CALIFORNIA

CUSTOMER:

ROOF FRAMING DETAILS

DATE:	12/27/99
SCALE:	AS NOTED
DRAWN BY:	PWD
DESIGNED BY:	MDB
CHECKED BY:	KAL
SERIAL NO.	

REVISIONS

NO	DATE	DESCRIPTION	NO	DATE	DESCRIPTION

PROJECT No. 99100

SHEET No. S3A

M:\99100\ACAD\STRUX\S3x.dwg 10-26-99 10:35:12 am EST