1. Manifolds 4" ANSI Class 150 AISI 316SS Schedule 10s ASTM A312 or Ø114.3mm x2mm
2. Base/Frame AISI 304SS
3. Standard system layout : panel right facing suction.
4. 3" lug style ANSI 150# class butterfly valve
5. NEMA 3R rated electrical panel

Note: panel size will vary with options

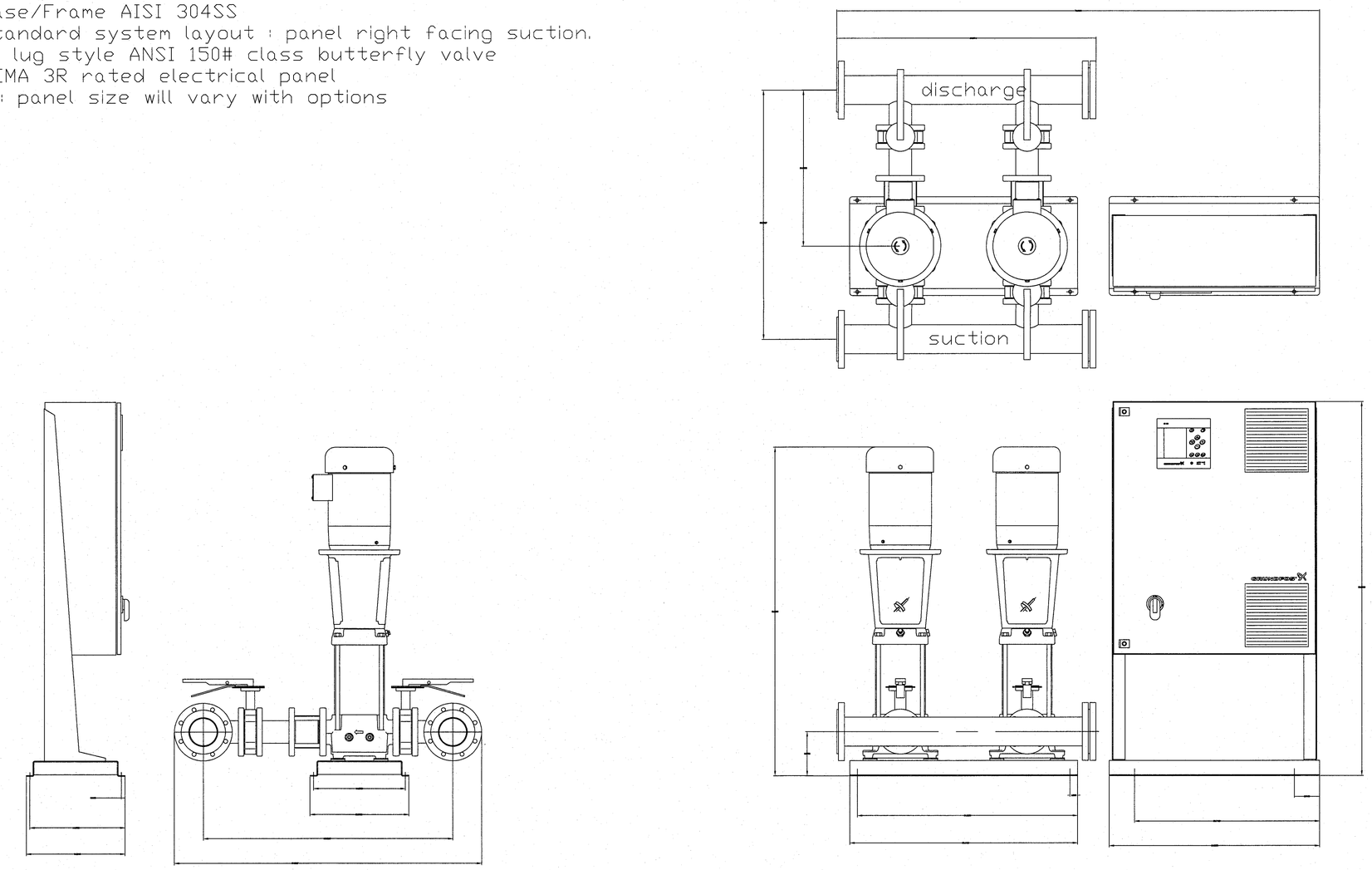


| | | | | |
|---|---|---|---|---|
| BoosterpaQ ModelMPC-F 2CR32-4 15hp | | | | |
| Power: 460/3/60 | | | | |
| Job: | | | | |
| Dwg No: | Rev: 0 | Date: 2-25-05 | Drawer: TS | Page: 1 of 1 |

Note:
All dimensions are ± 0.5"
Not for construction use.
All dimensions subject to change without notice.

GRUNDFOS

## A BOOSTER PUMP
SCALE: NTS

KERN TURF SUPPLY, INC.
INTELLIGENT PUMPING SOLUTIONS

PROJECT NAME: BCSD MIDDLE & ELEMENTARY SCHOOLS
LOCATION: BAKERSFIELD, CA

MODEL NUMBER: PMH MPC-F 2CR32-4
GPM: 360 MIN. INLET PSI: 28 MAX INLET PSI: 40 PUMP DISCHARGE PSI: 103
HP: 2 X 15 POWER SUPPLY: 3Ø/ 460V APPLICATION: IRRIGATION
CONTROL MODE: CONSTANT PRESSURE, SPEED CONTROL (VFD) PIPING SIZE: 4"
SYSTEM FULL LOAD AMPERAGE: 37 AMPS MAIN DISCONNECT SIZE: 60 AMPS

ADDITIONAL FEATURES (INCLUDED):
-SERVICE DISCONNECT SWITCHES
-SURGE PROTECTION
-E/N SWITCHES
-PUMP RUN LIGHTS
-ALARM CIRCUITS

NOTES:
-PUMP STATION INLET/DISCHARGE PIPING IS RECOMMENDED TO BE PLUMBED THROUGH CONCRETE PAD.
-RECOMMENDED CONCRETE PAD SIZE: 120"L X 84"W X 6"D
-PUMP STATION WILL BE ORDERED ONLY AFTER A VOLTAGE VERIFICATION FORM HAS BEEN SIGNED BY THE INSTALLER (AVAILABLE FROM KERN TURF SUPPLY, INC.)
-44 GALLON DIAPHRAGM TANK IS TO BE INSTALLED ON THE DISCHARGE SIDE OF THE PUMP STATION MANIFOLD.

LEAD TIME: 4 TO 6 WEEKS A.R.O.

PRICING: PLEASE CONTACT JOSH BANDUCCI (661) 978-5935 AT KERN TURF SUPPLY, INC. FOR A PRICE QUOTE AND/OR FURTHER INFORMATION.

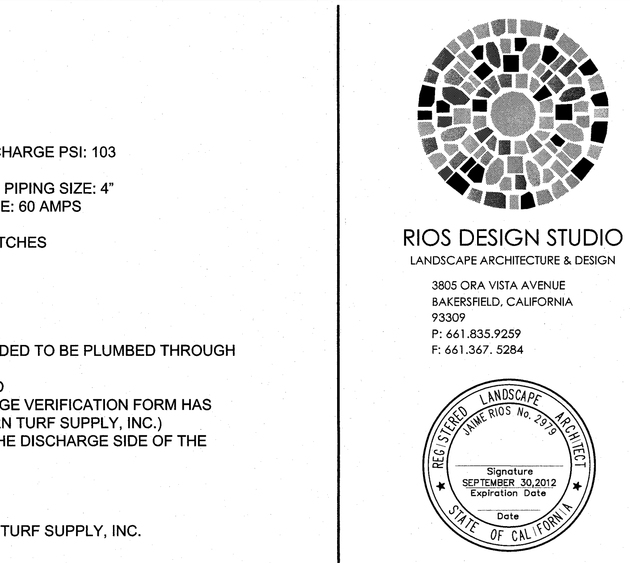

DANNY E. ORDIZ, AIA
ARCHITECT C-14,728

WILLIAM J. MELBY, AIA
ARCHITECT C-16,835

IDENTIFICATION STAMP
DIVISION OF STATE ARCHITECT
OFFICE OF REGULATION SERVICES
APPL. #:
FILE #:
AC_____ FLS_____ SS_____
DATE_____

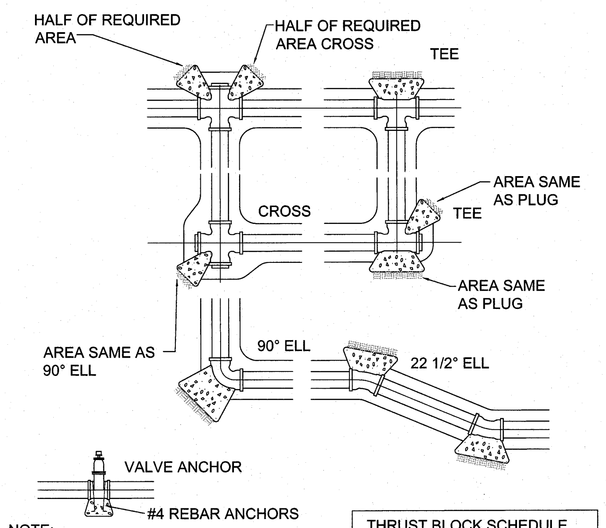


NOTE:
ALL THRUST BLOCKS TO BE POURED AGAINST UNDISTURBED SOIL, CONCRETE SHALL BE PLACED BEHIND BELLS OF FITTINGS. BEARING AREAS SHOWN IN TABLE ARE BASED ON ALLOWABLE SOIL PRESSURE OF 1500 PSF.

THRUST BLOCK SCHEDULE

| BEARING AREA, SF | | | | |
|---|---|---|---|---|
| PIPE SIZE | TEE OR PLUG | 90° ELL | 45° ELL | 22.5° ELL |
| 2" | 2 | 2 | 2 | 1 |
| 3" | 2 | 2 | 2 | 1 |
| 4" | 2 | 2 | 2 | 1 |
| 6" | 3 | 4 | 2 | 2 |
| 8" | 5 | 7 | 4 | 2 |

## B THRUST BLOCKS FOR IRRIGATION LINES
SCALE: NTS

NEW ELEMENTARY SCHOOL
9801 HIGHLAND KNOLLS DR
BAKERSFIELD
CALIFORNIA
93306

NEW MIDDLE SCHOOL
4115 VINELAND ROAD
BAKERSFIELD
CALIFORNIA
93306

FOR:

BAKERSFIELD CITY SCHOOL DISTRICT

1300 BAKER STREET
BAKERSFIELD
CALIFORNIA
93305

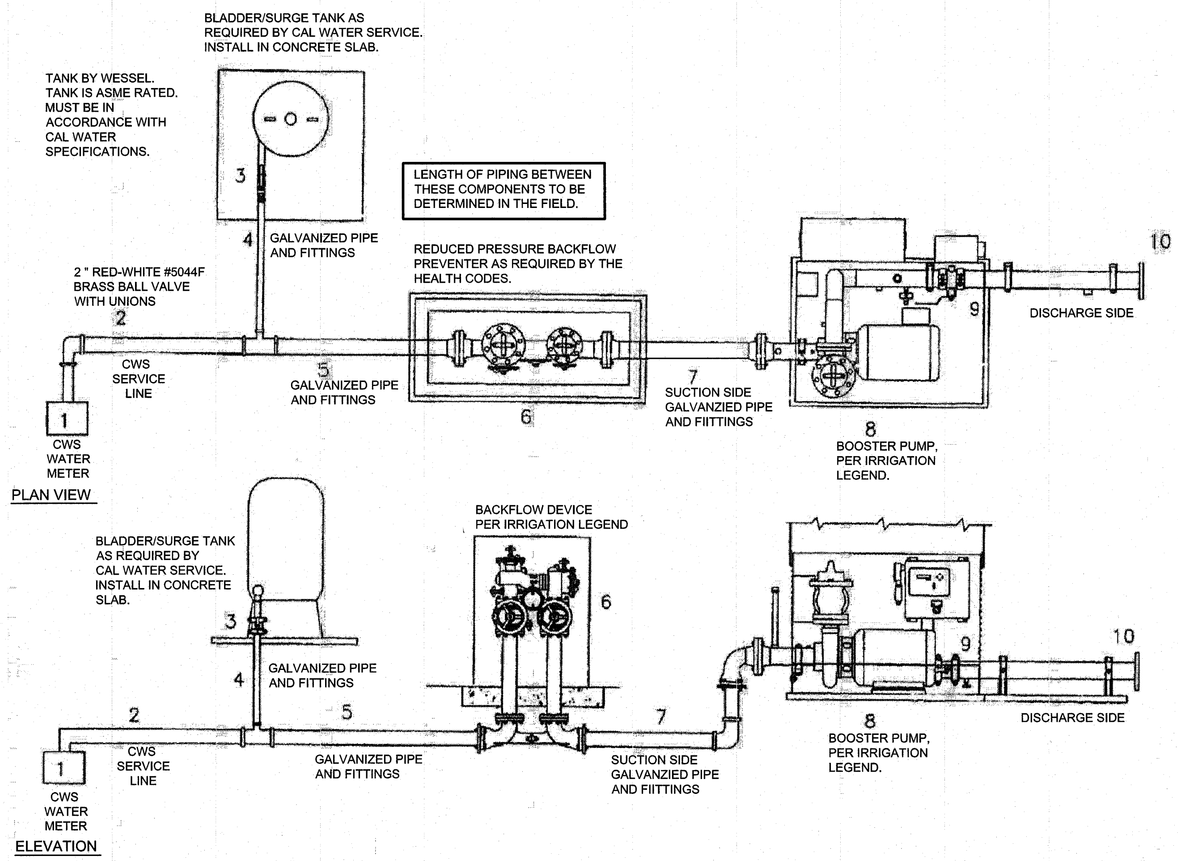


## C BLADDER/SURGE TANK INSTALLATION
SCALE: NTS

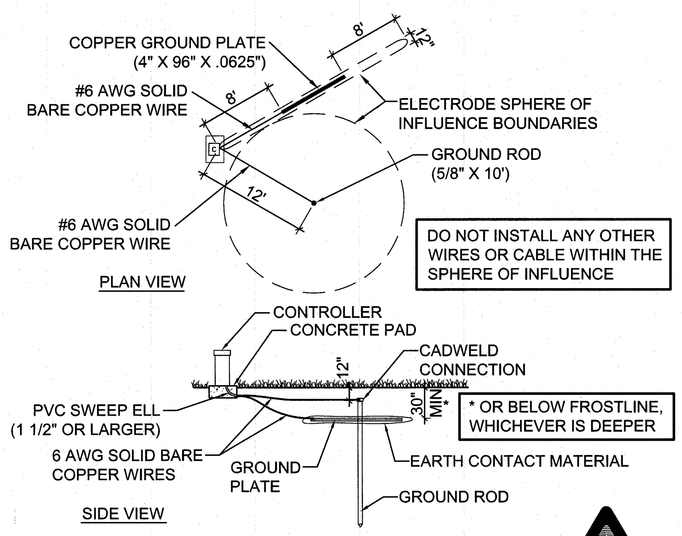


## D GROUNDING ROD
SCALE: NTS

1. 8' x 5/8" UL COPPER CLAD GROUND ROD
2. 10' #6 SOLID COPPER GROUND WIRE
3. CAD WELD CONNECTOR
4. 10" ROUND PLASTIC VALVE BOX
5. DBR-6 CONNECTOR
6. DBY CONNECTOR
7. HUNTER ICD-100
8. IDWIRE1 OR IDWIRE2, 2 WIRE PATH, SIZE PER SPECIFICATION
9. HUNTER ICD-SEN
10. PLASTIC VALVE BOX WITH COVER
11. IRRIGATION CONTROL VALVE
12. MAIN SUPPLY LINE
13. PVC COUPLING SCH 40
14. FINISH GRADE
15. DISTANCE EQUALS 10 TIMES DIAMETER OF PIPE SIZE
16. DISTANCE EQUALS 5 TIMES DIAMETER OF PIPE SIZE
17. HUNTER HFS
18. REFER TO LEGEND ON SHT L-9 FOR FCT SIZE.

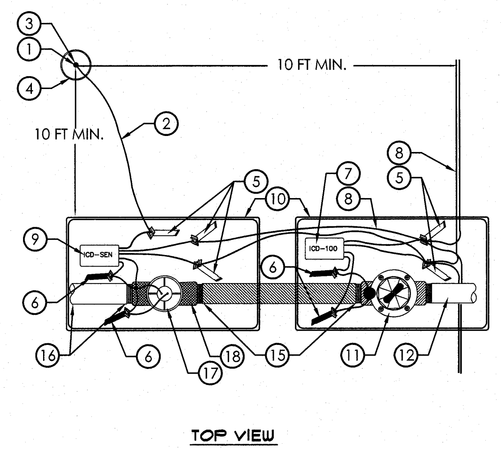


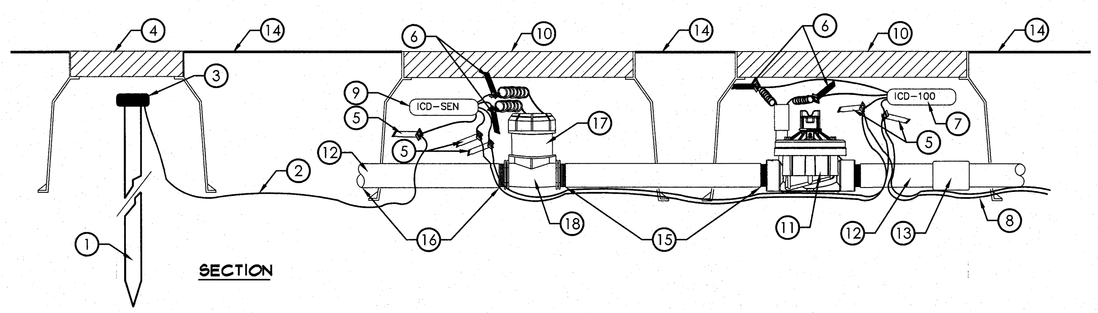


## E MASTER VALVE AND FLOW SENSOR GROUNDING ROD
SCALE: NTS

| MARK | DATE | DESCRIPTION |
|---|---|---|
| • | 04/15/11 | PROGRESS SET NOT FOR CONSTRUCTION |
| △ | | |
| △ | | |
| △ | | |
| △ | | |

JOB NUMBER:
200101244
CAD DRAWING FILE:
#Pln1244-BLDG F(3&4 QUAD E CLASSROOM)-CD.pln
DRAWN BY:
JR:
CHECKED BY:
MER:

CHECK AND VERIFY ALL DIMENSIONS BEFORE PROCEEDING WITH THE WORK. REPORT DISCREPANCIES TO THE ARCHITECT.

THE DRAWINGS, IDEAS, AND DESIGNS REPRESENTED ON THIS SHEET ARE THE PROPERTY OF THE ARCHITECT.

COPYRIGHT
ORDIZ-MELBY ARCHITECTS, INC. 2010

SHEET TITLE

IRRIGATION DETAILS

SHEET IDENTIFICATION NUMBER

L13

PLOT TIME: 11:13 AM
PLOT DATE: 4/15/2011
PATHNAME: S:\Jobs 101-1500\200101244\Drawings\CD\1244 BLDG F(3&4 QUAD E CLASSROOM)-CD.pln