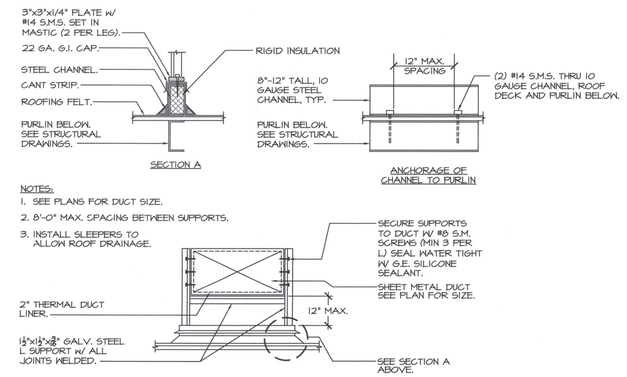

DUCT SUPPORT - BUILDING A (GYMNASIUM UNITS) — F

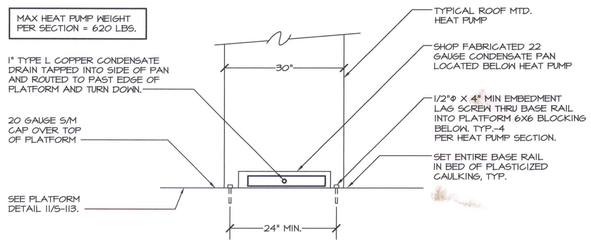

HEAT PUMP ON PLATFORM - BLDG. B & L (ROOF) — G

SCALE: N.T.S

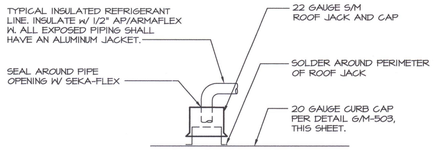

PIPES THRU PLATFORM — H

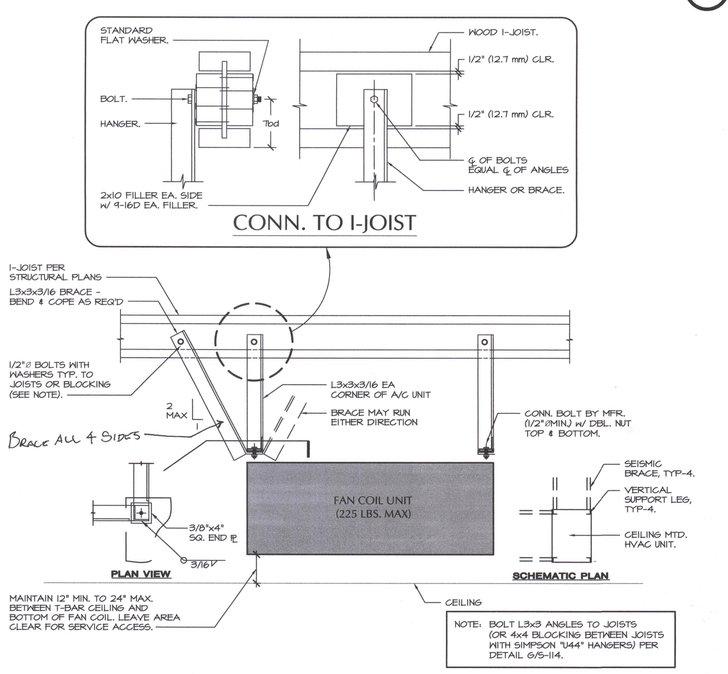

SUSPENDED FAN COIL & BRANCH SELECTOR BOX ANCHORAGE — I

SCALE: N.T.S.

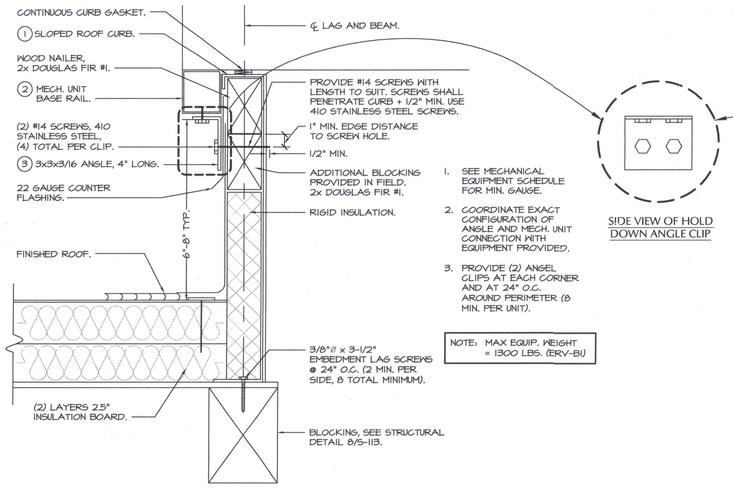

A.C. UNIT AND ERV UNIT ANCHORAGE - BUILDINGS B, H, L — C

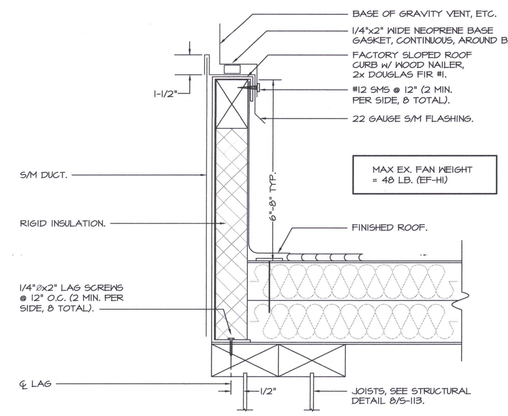

EXHAUST FAN/GRAVITY VENT SUPPORT - BUILDINGS B, H, J, K, L, M, Q, R — D

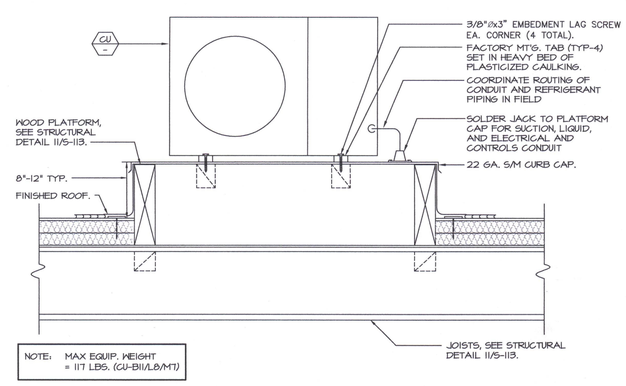

CONDENSING UNIT ON LEVEL PLATFORM - BUILDINGS B, L, M — E

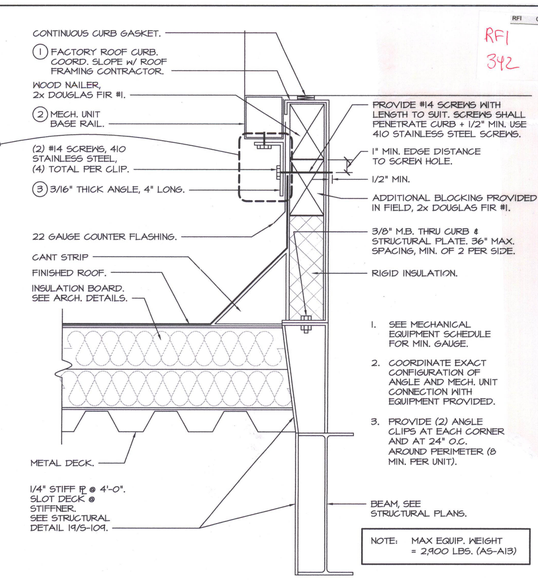

A.C. UNIT ANCHORAGE - BUILDING A — A

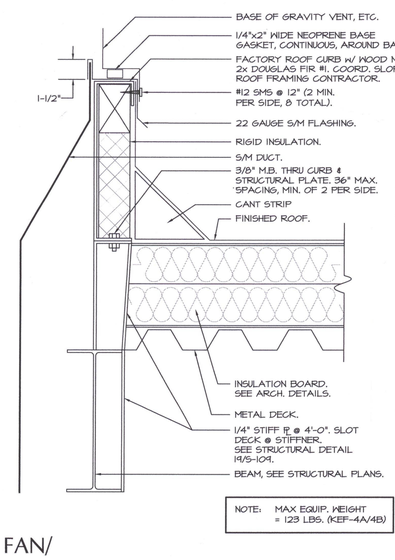

EXHAUST FAN/ GRAVITY VENT SUPPORT - BUILDING A — B

NOTE: WOOD NAILERS TO BE 1x OR 2x AS REQUIRED TO SUIT ROOF CURB.

RFI 342

RFI O-M LM 00342 Curb for Kitchen Con

Lundgren Management - 6/3/13

Sheet AD3-A141A & ASI12.141A calls out Detail A/M503 for the curb at kitchen compressor unit.

Please confirm that the curb for the kitchen compressors is to be metal as identified on Detail A/M503.

Answer

Joe Covington - OMA - 6/6/13

After a review of the drawings and details, we have discovered some items that need clarification. Sheets A-141A, AD3-141A, ASI 12-141A all called out for the same detail reference of Detail A Sheet M503. This installation and mounting of the Compressor Rack unit requires the coordination of the drawings and descriptions given by the Kitchen Consultants information found on Sheet K-4 and with the revision of APR 36 K-4.
While the Detail A Sheet M503 will facilitate a similar installation of the Compressor Rack, special attention must be given to the location of support legs or members that bolt to the curb.
It calls for a steel angle to provide an "anchorbolt attachment per mechanical". Detail A Sheet M503 would be difficult to provide and only be similar. More clarification is required for proper support. We would suggest that a concrete pad be provided as the installation would be provided per Structural Detail 14 Sheet S109 and Detail M509 using 3/8" dia x 3 ½" embed HIlti KB-TZ bolts spaced per Compressor Rack detail on Sheet APR 36 K-4.
As provided on the Architectural Roof Plan Drawings, the curb for the future Outdoor Compressor for Data room equipment need not be installed at this time. However, the Structural drawings sheet S202A delineates the supports required and the curb.
The work for this future unit's "expected" curb may be omitted and provided at the Cold Box Compressor Rack.

Clarification, that Make-up Air Units MUA/1 & MUA/2 definitely indicate concrete curbs per Details Sheet M509 & Detail 14/S109. No provisions have been provided to install these units over steel fabricated curbs.
Field Verified condition, and possible resolution to construct the curb different than shown on the drawings must come via the Construction Manager (from the Contractors).
The Proposal will be re-evaluated and construction may not proceed until DSA reviews it in a CCD if the structure is affected by this revision.

RDIZ
ELBY
TECTS, INC.
NUE SUITE 280
CALIFORNIA 93309
(661) 832-5258
(661) 832-4291
REGISTERED ARCHITECT ANNE E. ORDIZ No. C-14728 MAY 31, 2013 CALIFORNIA
ANNE E. ORDIZ, AIA ARCHITECT C-14,728
WILLIAM J. MELBY, AIA ARCHITECT C-16,835

IDENTIFICATION STAMP
DIVISION OF STATE ARCHITECT
OFFICE OF REGULATION SERVICES
APPL. #:02-112027
FILE #: 15-6
AC — FL SS GR
DATE JAN 20 2012

PTN # 63321-112

NEW ELEMENTARY SCHOOL
9801 HIGHLAND KNOLLS DR
BAKERSFIELD
CALIFORNIA
93306

NEW MIDDLE SCHOOL
4115 VINELAND ROAD
BAKERSFIELD
CALIFORNIA
93306

FOR:

BAKERSFIELD CITY SCHOOL DISTRICT
1300 BAKER STREET
BAKERSFIELD
CALIFORNIA
93305

MARK	DATE	DESCRIPTION
1		
2		
3		
4		
5		

JOB NUMBER: 200101244
CAD DRAWING FILE:
DRAWN BY: KW
CHECKED BY: MB

CHECK AND VERIFY ALL DIMENSIONS BEFORE PROCEEDING WITH THE WORK. REPORT DISCREPANCIES TO THE ARCHITECT.

THE DRAWINGS, IDEAS, AND DESIGNS REPRESENTED ON THIS SHEET ARE THE PROPERTY OF THE ARCHITECT.

COPYRIGHT
ORDIZ-MELBY ARCHITECTS, INC. 2010

SHEET TITLE
MECHANICAL DETAILS

SHEET IDENTIFICATION NUMBER
M-503

REGISTERED PROFESSIONAL ENGINEER MARK JAMES BAUMAN No. M20678 Exp. 9-30-12 MECHANICAL STATE OF CALIFORNIA

MDC
MECHANICAL DESIGN CONCEPTS, INC.
5500 Ming Ave, Suite 251 Bakersfield, CA 93309
Tel #: (661) 397-2114 FAX #: (661) 397-2116
Job: 09091 Plt: 1-11-12