SITE FIXTURE SCHEDULE

TYPE	MANUFACTURER & CATALOG NO.	LAMP MFR	LAMP TYPE	LAMP WATTS	BALLAST	LENS	REMARKS
5A 200	GARDCO GULLWING GL18-1-3-200LA-NW-UNV-BRP-SR525-5-D1-BRP		LED	200	LED DRIVER	FLAT GLASS	SITE LIGHT W/ POLE 2TTV
5B 200	GARDCO GULLWING GL18-1-4-200LA-NW-UNV-BRP-SR525-5-D1-BRP		LED	200	LED DRIVER	FLAT GLASS	DOUBLE 2TTV
5C 400	GARDCO GULLWING GL18-2-3-200LA-CW-UNV-BRP-SR525-5-D2-BRP		LED	2/200	LED DRIVER	FLAT GLASS	TRIPLE 2TTV
5D 95	LOUIS POULSEN SATT-MIN-53WLED4000K2TTBR ALTR5A4.5"-12'-BR AL		LED	95	LED DRIVER	FLAT GLASS	WALKWAY LIGHT 2TTV
5E 27	KENALL FS818R2TBPIAMW27L40K		LED	27	LED DRIVER	HIGH IMPACT	EXTERIOR SCONCE/CEILING 2TTV
5F 35	BEGA 2845P-WHITE-2TTV	SYLVANIA	F32TRT 4100K	32	ELECTRONIC	FLAT GLASS	WALL FIXTURE 2TTV
5G 52	HYDREL RHYA-BPCA-WHT41K-MVOLT-MFL-KM		LED	52	LED DRIVER	CLEAR ACRYLIC	MONUMENT LIGHTING 2TTV
5H 12	HYDREL M9420-A-12LED-WHT41K-MVOLT-MFL-FLC-345-LP		LED	12	LED DRIVER	CLEAR	IN GROUND 2TTV

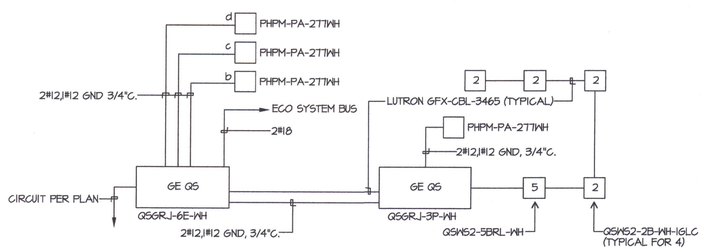

MULTI PURPOSE GRAFIK EYE SINGLE LINE DIAGRAM (A)
N.T.S.

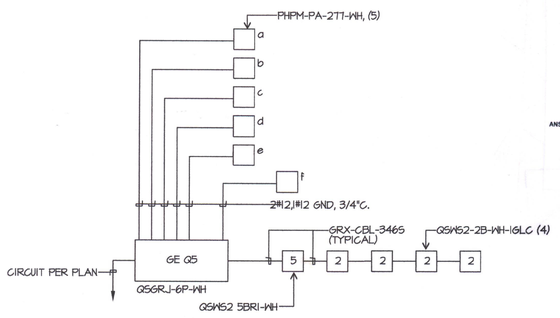

MULTI PURPOSE GRAFIK EYE SINGLE LINE DIAGRAM (B)
N.T.S.

REQUEST:
RDM Electric - 1/11/13 RFI 246R

Reference Sheet E-016 & Approved Lighting Submittal
Per the Light Fixture Schedule and the approved Lighting Submittal, the Type SE light fixture is an LED fixture. However, this fixture only comes in 120V for LED. The Lighting Plans show these fixtures to be installed along with the other 277V fixtures via 277V panelboards. Is it acceptable to change the Type SF light fixtures to compact fluorescents to allow installation at 277V or are we to pull additional wire (and conduit) to a 120/208V panel? Please advise.

RDM Electric - REVISED QUESTION - 1/22/13
You are correct, the manufacturer does make the Type SE light fixture in a 277V LED. However, what we meant to ask about was the (3) Type SE light fixtures that drive the "EM" next to them, indicating that they are emergency fixtures. There is (1) located just south of Room A133, (1) just north of Room A140 and (1) just south of Room B100. The manufacturer does not make an emergency 277v LED for this fixture. Please advise on how to proceed with these (3) light fixtures.

ANSWER:
John Maloney - JMPE - 1/17/13

I have confirmed with the fixtures that this fixture is available in 277v and LED.

John Maloney - JMPE - 1/29/13
Provide specified Type "SE" at all locations except:
1. At column lines N/15 & X/15 provide Kenall # FN16MW36RP38L40K277LEL

FIXTURE SCHEDULE

TYPE	MANUFACTURER & CATALOG NO.	LAMP MFR	LAMP TYPE	LAMP WATTS	BALLAST	LENS	REMARKS
A 52	CREE LR24-38-SKA35-2TTV		LED 3500K	52	ELECTRONIC DRIVER	ACRYLIC	2x2 LED DROP IN 2TTV
B 14	CREE LR6CDR1000-2TTV-H6		LED 3500K	14	ELECTRONIC DRIVER	NONE	LED DOWNLIGHT 2TTV
C 26	KENALL HRDL6L-26L40K-DV-SCC-FWCSS8		LED 4000K	26	ELECTRONIC DRIVER	CLEAR	LED VANDAL DOWNLIGHT 2TTV
EC 26	KENALL HRDL6L-26L40K-DV-SCC-FWCSS8-EL		LED 4000K	26	ELECTRONIC DRIVER	CLEAR	LED VANDAL DOWNLIGHT W/EMERGENCY BATTERY BACK UP 2TTV
D 58	KENALL MLHA8-48-R-MW-PP-2-32-RS-1-DV	GE	F32T8 4100K	2/32	PROGRAM START ELECTRONIC	POLYCARBONATE	4FT, 2 LAMP FLUORESCENT 2TTV
D1 35	KENALL MLHA5-48-R-MW-PP-1-32-RS-1-DV	GE	F32T8 4100K	1/32	PROGRAM START ELECTRONIC	POLYCARBONATE	4FT, 2 LAMP FLUORESCENT 2TTV
E 3	SIGNTEX RPR-N-BB-IR-W-TW-2TTV		LED		NICAD BATTERY	RED	EXIT LIGHT MASTER UNIT 2TTV
EL 3	SIGNTEX RPR-RF-NB-IR-W-REC-2TTV		LED		NICAD BATTERY	RED	LOW LEVEL EXIT LIGHT 2TTV
EM 20	JUNO N2WH-2TTV	—	—	—	NICAD BATTERY	PRISMATIC	EM LIGHT 2TTV
F 232	LINEAR SP2TB2T82TTNS/PRD-C18-BW	GE	F32T8 4100K	8/32	ELECTRONIC	NONE	16 FT LONG FLUORESCENT WALL MOUNT UPLIGHT 2TTV
G 340	LITHONIA I BEAM 8T-IBZ-632 2TT-ECO SYS	GE SPX	F32T8 4100K	2(6)32	ECO SYSTEM	WIRE GUARD	GYM - HIGH BAY 2TTV
H 25	ALKCO ARIS ARIS41-40-120PRLHWC-RSW		LED 3500K	25	ELECTRONIC	PRISMATIC	UNDER CABINET LED WITH ROCKER SWITCH 120V
J 35	LITHONIA 5I32 2TT-WG	GE SPX	F32T8 3500K	32	ELECTRONIC	WIRE GUARD	STRIP LIGHT 2TTV
K 26	LOUIS POULSEN PH 5 PH5 1/23/CF 2TT		F23TT 3500K	23	ELECTRONIC		MUSIC ROOM PENDANT 2TTV
L 35	SCOTT 53150-C32T-AP-TPL-2TTV	SYLVANIA	F32TRT 3000K	32	LUTRON HI-LUME	ACRYLIC	CAFETERIA SCONCE 2TTV
M 464	LINEAR SP2TB3T82TTNS/PRD-WMT-BW-32	GE	F32T8 3500K	16/32	ELECTRONIC	LOUVER	32' LONG FLUORESCENT WALL MOUNT 2TTV
N 30	LOUIS POULSEN ORBITER ORP 1/26WCF GX2 4G-3 120-2TTV WHT	SYLVANIA	F26TRT 3000K	26	ELECTRONIC	GLASS	ADMINISTRATION LOBBY PENDANT 2TTV
P 114	LINEAR SP2TB3T82TT NS/PRD-WMT-BW-12	GE SPX	F32T8 3500K	6/32	ELECTRONIC	LOUVER	ADMINISTRATION LOBBY 12FT LONG FLUORESCENT WALL MOUNT UPLIGHT 2TTV
Q 400	LSI 61320,61300,61303	GE CONSTANT COLOR	MR16 PRECISE	50 EXN	ELECTRONIC XFMR	BEAM SOFTENING	8' TRACK WITH 8 FIXTURES 2TTV
R 116	LINEAR SP2TB3T82TT NS/PRD-C18-BW-8	GE SPX	F32T8 3500K	4/32	ELECTRONIC	LOUVER	ADMINISTRATION OFFICE 8' LONG FLUORESCENT PENDANT 2TTV

ALL FLUORESCENT LAMPS SHALL BE LOW MERCURY.

RFI O-M LM 00375 Aiming Direction of Type SC Lights CLO 9/17/2013 9/18/2013

RFI 376

RDM Electric - 9/11/13

Reference Sheets E016 & E114
The Light Fixture Schedules shows the Type SC light fixtures to be a triple head fixture. The Site Lighting Plan shows (5) Type SC light fixtures to be installed in the island at the bus loop. Which direction should the single head face, east or west? Please advise.

9/17 Site Meeting with RDM to determine fix for site lights. 3 headed fixtures were intended to have two heads, double headed fixtures were intended to have on head. Conflict on the fixture schedule. Additional fixtures will be removed and holes covered/patched on a T&M basis.

RFI O-M LM 00375 Voltage for Type K Lights ULU 9/16/2013 9/17/2013

RFI 375

RDM Electric - 9/16/13

Reference Sheets E016, E132A & E132L
The Electrical Plans for Buildings A & L show (3) Type K light fixtures to be installed in Room A105, (3) to be installed in Room A114 and (2) to be installed in Room L109. The fixture schedule calls out for the Type K light fixtures to be 277V, however the Type K light fixture that was submitted and approved is a 120V fixture. These light fixtures have already been ordered and delivered to the jobsite, but will not work with a 277V circuit. Please advise.

Fixtures to be 277v and issue has been resolved.

REQUEST:
RDM Electric - 4/3/13 RFI 295

Reference Sheet E-016, E-114 & E-115
The Light Fixture Schedule calls out for the Type SA light fixture to be single head, the Type SB light fixture to be double head and the Type SC light fixture to be triple head. However, in some areas, the symbols shown on the Lighting Site Plan and the Site Lighting Photometric Plan do not reflect this. Please confirm that there are to be (14) single head Type SA light fixtures, (7) double head Type SB light fixtures and (10) triple head Type SC light fixtures installed as called out for in the locations shown.

ANSWER:
John Maloney - JMPE - 4/4/13

E115 is for reference only. It is not for construction. Correct quantities, locations & type of site fixtures are shown on E-114.

REQUEST:
RDM Electric - 1/11/13 RFI 246

Reference Sheet E-016 & Approved Lighting Submittal
Per the Light Fixture Schedule and the approved Lighting Submittal, the Type SE light fixture is an LED fixture. However, this fixture only comes in 120V for LED. The Lighting Plans show these fixtures to be installed along with the other 277V fixtures via 277V panelboards. Is it acceptable to change the Type SF light fixtures to compact fluorescents to allow installation at 277V or are we to pull additional wire (and conduit) to a 120/208V panel? Please advise.

ANSWER:
John Maloney - JMPE - 1/17/13

I have confirmed with the fixtures that this fixture is available in 277v and LED.

ORDIZ MELBY
ARCHITECTS, INC.
5500 MING AVENUE SUITE 280
BAKERSFIELD, CALIFORNIA 93309
TELEPHONE (661) 832-5258
FACSIMILE (661) 832-4291

LICENSED ARCHITECT DANNY ESPINEDA ORDIZ No. C- 14728 MAY 31, 2013 RENEWAL DATE STATE OF CALIFORNIA

DANNY E. ORDIZ, AIA
ARCHITECT C-14,728

WILLIAM J. MELBY, AIA
ARCHITECT C-16,835

CONSULTANT

IDENTIFICATION STAMP
DIVISION OF STATE ARCHITECT
OFFICE OF REGULATION SERVICES
APPL. # : 02-112027
FILE # : 15-6
AC FLS SS
DATE 1/15/12

NEW ELEMENTARY SCHOOL
9801 HIGHLAND KNOLLS DR
BAKERSFIELD
CALIFORNIA
93306

NEW MIDDLE SCHOOL
4115 VINELAND ROAD
BAKERSFIELD
CALIFORNIA
93306

FOR:

BAKERSFIELD CITY SCHOOL DISTRICT
1300 BAKER STREET
BAKERSFIELD
CALIFORNIA
93305

JMPE
ELECTRICAL ENGINEERING
LIGHTING DESIGN
CA REGISTRATION NO E13060
10244
5500 MING AVENUE, SUITE 201
BAKERSFIELD, CA 93300
(661) 831-7861
FAX (661) 831-7913
email : maloney@jmpe.net
www.jmpe.net

MARK	DATE	DESCRIPTION

JOB NUMBER:
20101244

CAD DRAWING FILE:

DRAWN BY:
AC

CHECKED BY:
PH

CHECK AND VERIFY ALL DIMENSIONS BEFORE PROCEEDING WITH THE WORK. REPORT DESCREPANCIES TO THE ARCHITECT.

THE DRAWINGS, IDEAS, AND DESIGNS REPRESENTED ON THIS SHEET ARE THE PROPERTY OF THE ARCHITECT.

COPYRIGHT
ORDIZ-MELBY ARCHITECTS, INC. 2010

SHEET TITLE
FIXTURE SCHEDULES

SHEET IDENTIFICATION NUMBER
E-016

SHEET OF

JMPE/JOB#:10294/DATE:01-10-12 AC