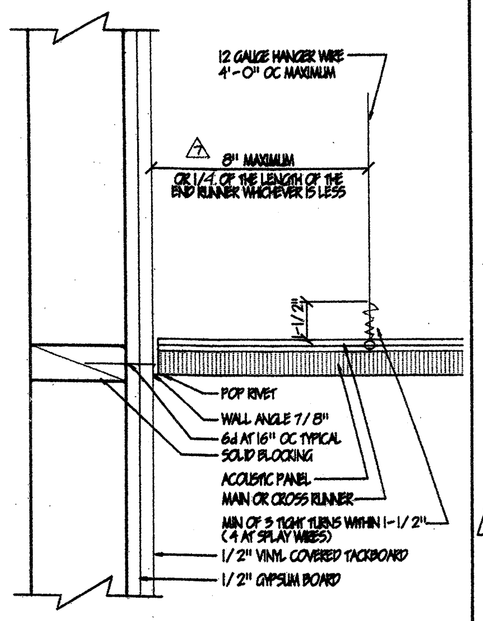

1 TYPICAL FIXED SIDE SCALE: 3/4"=1'-0"

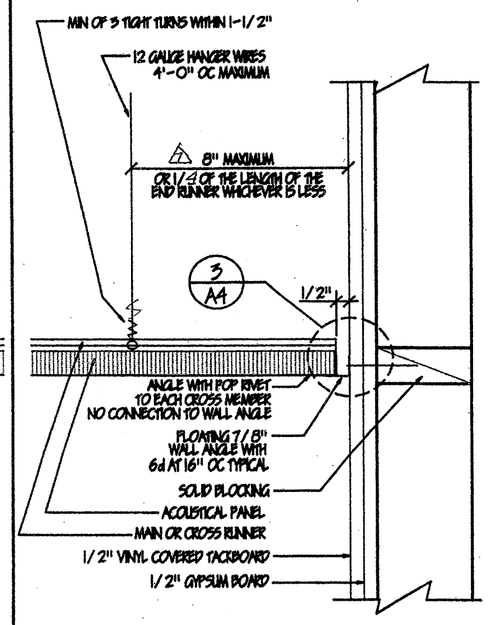

2 TYPICAL FREE SIDE SCALE: 3/4"=1'-0"

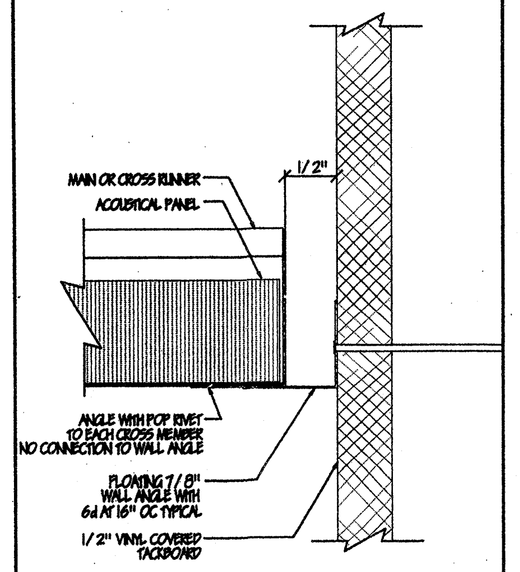

3 TYPICAL FREE CONN. SCALE: 1"=1'

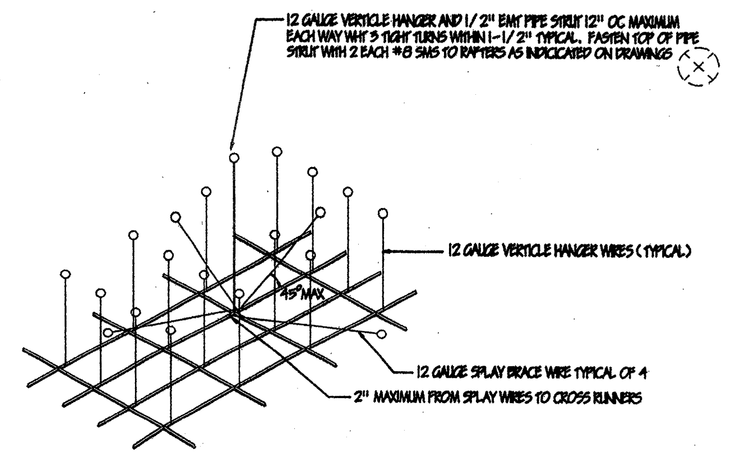

4 ATTACHMENT FOR CEILING GRID NOT TO SCALE

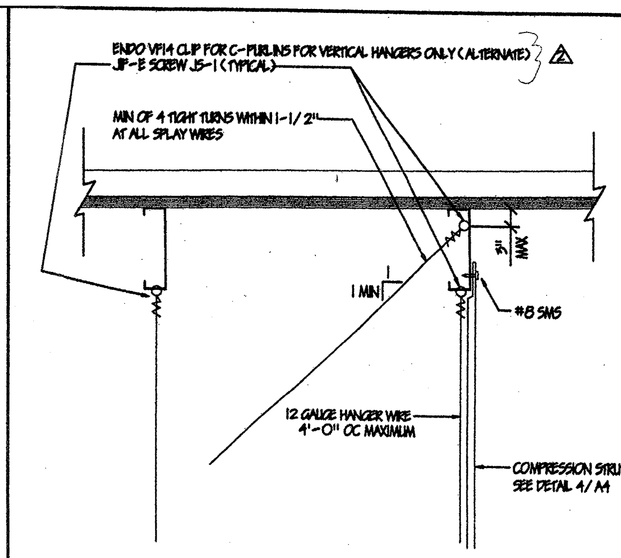

1:6 MAXIMUM FOR TYPICAL HANGER WIRE
45 MAXIMUM FROM HORIZONTAL FOR SPLAY BRACING AND FOR SLACK BRACING OF FIXTURES AND REGISTERS

5 ATTACHMENT AT ROOF SCALE: 1-1/2"=1'-0"

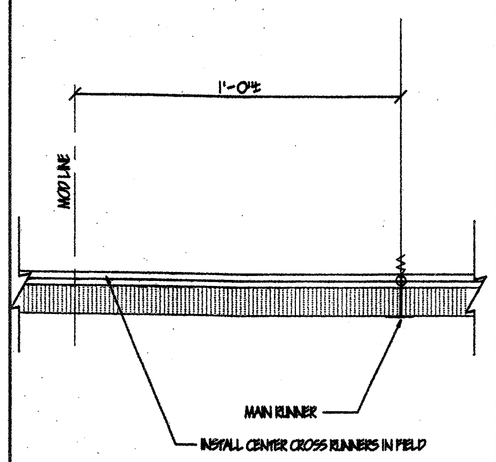

6 GRID AT MOD LINE SCALE: 3/4"=1'-0"

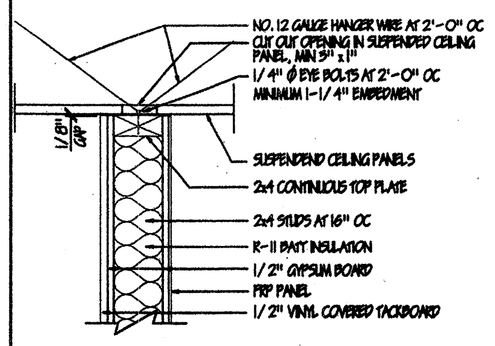

7 INTERIOR WALL SCALE: 1-1/2"=1'-0"

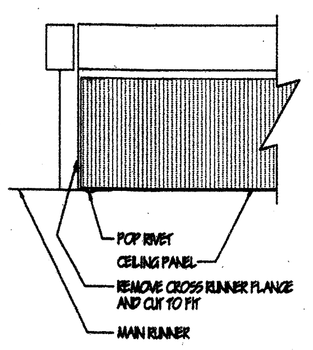

8 GRID AT MOD LINE SCALE: 1"=1'

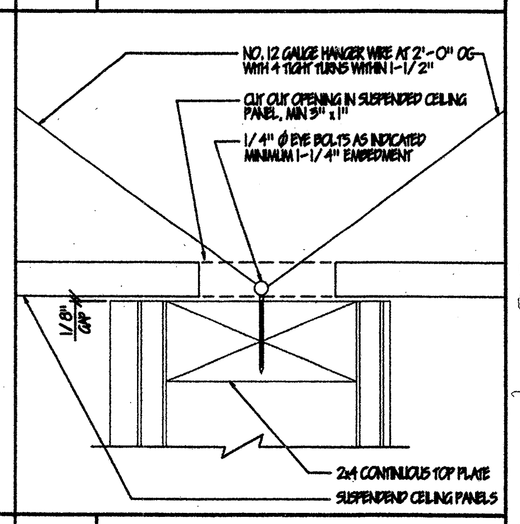

9 WALL CONNECTION SCALE: 3/4"=1'-0"

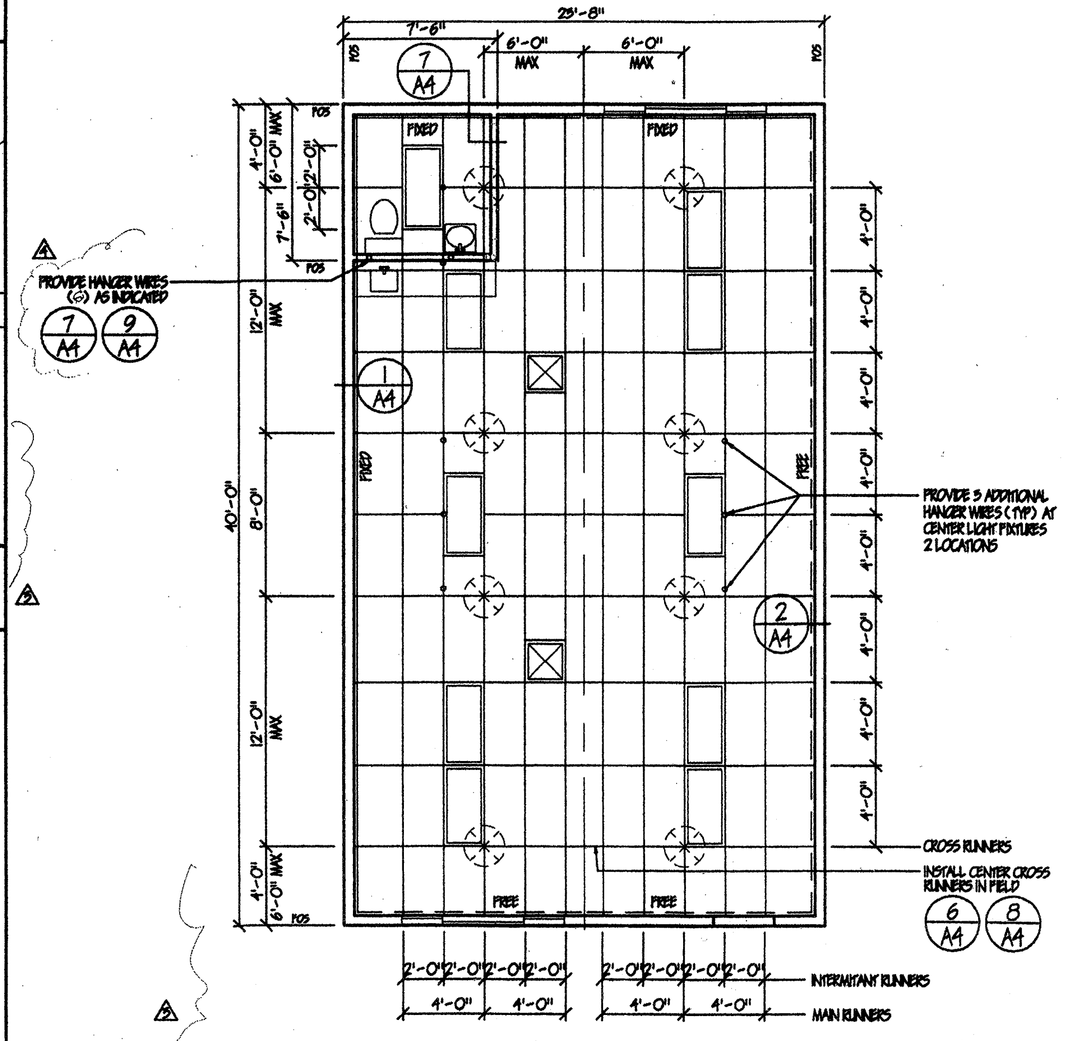

24 X 40 ALT. REFLECTED CEILING PLAN SCALE: 3/16"=1'-0"

(REVERSE SIMILAR)

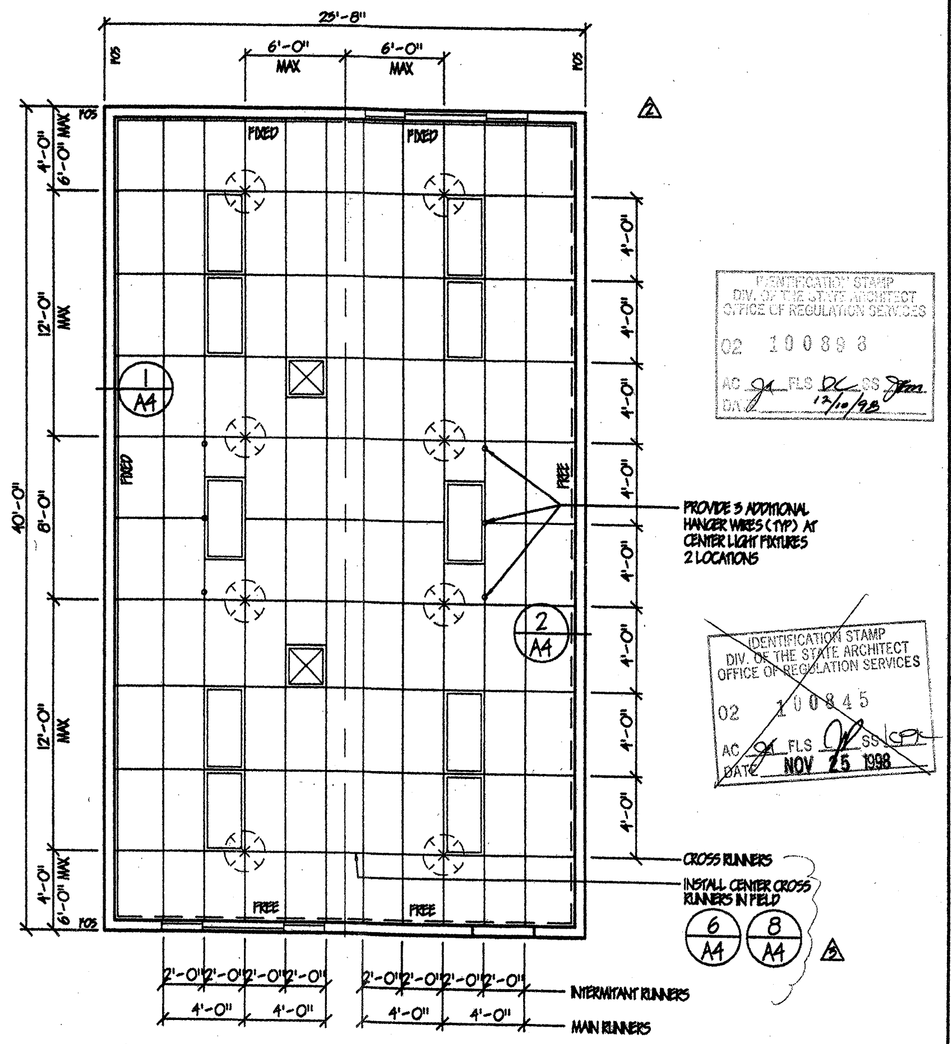

24 X 40 REFLECTED CEILING PLAN SCALE: 3/16"=1'-0"

(REVERSE SIMILAR)

IDENTIFICATION STAMP
DIV. OF THE STATE ARCHITECT
OFFICE OF REGULATION SERVICES
02 100898
AC FLS SS
DATE 12/10/98

IDENTIFICATION STAMP
DIV. OF THE STATE ARCHITECT
OFFICE OF REGULATION SERVICES
02 100845
AC FLS SS
DATE NOV 25 1998

IDENTIFICATION STAMP
DIV. OF THE STATE ARCHITECT
OFFICE OF REGULATION SERVICES
02 100597
AC FLS SS
DATE 7/1/98

IDENTIFICATION STAMP
DIV. OF THE STATE ARCHITECT
OFFICE OF REGULATION SERVICES
PC 330
AC FLS SS
DATE 12/7/97

FEB 4 1998 REV #6

GENERAL NOTES

MAIN RUNNERS AT 4'-0" ON CENTER WITH 12GA HANGER WIRES AT END OF EACH RUNNER.

AT END OF ROWS OF RUNNERS A 12GA HANGER WIRE SHALL BE ATTACHED WITHIN 8" OF WALL, OR 1/4 LENGTH OF END TEE.

VERTICAL WIRES MORE THAN 1 IN 6 CUT OF PLUMB SHALL HAVE COUNTER BRACING WIRES.

PROVIDE 2-12GA SLACK WIRES TO HOUSING OF ALL LIGHT FIXTURES AT DIAGONAL CORNERS. WIRES SHALL BE ATACHED TO STRUCTURE. ATACH WIRES TO LIGHT FIXTURES WITH #8 SHEET METAL SCREW AT EACH CORNER.

RUNNERS MAY BE ATTACHED TO WALLS AT ONLY TWO ADJACENT WALLS. ALL OTHER CONDITIONS MUST PROVIDE A CLEARANCE OF 1/2" BETWEEN END OF RUNNERS AND FACE OF WALL.

CEILING AREAS SHALL HAVE 4-WAY SPLAYS AT LOCATIONS INDICATED. WIRES TO BE TAUT, BUT NO DISTORTION OF GRID.

ALL FINISHES SHALL COMPLY WITH CBC CHAPTERS 5, 6, 7, 8, AND 10

DUCTWORK SHALL BE RIGIDLY ATTACHED TO BUILDING AND SHALL NOT BE CLOSER THAN 6" TO HANGER WIRES.

REGISTERS SHALL BE POSITIVELY ATTACHED WITH 4-10GA SHEET METAL SCREWS TO GRID.

CEILING PANELS, 2'x4' LAY-IN PANELS, ASTM FLAME SPREAD CLASS I (0-25). FLAME SPREAD SMOKE DEVELOPMENT DENSITY LESS THAN 450.

△2 MAIN RUNNERS: ARMSTRONG PRELUDE XL, 7501 HD, OR EQUAL.

△2 INTERMEDIANT RUNNERS: ARMSTRONG PRELUDE XL, XL-7312, OR EQUAL.

△2 CROSS RUNNERS: ARMSTRONG PRELUDE XL, XL-7328, OR EQUAL.

WALL ANGLES: FSI 8000/8501, CSI 8000/8501, OR EQUAL.

ABBREVIATIONS:

AFF	ABOVE FINISH FLOOR
AL OR ALUM	ALUMINUM
ALT	ALTERNATE
CONN	CONNECTION
GA	GAUGE
HM	HOLLOW METAL
MAX.	MAXIMUM
MIN.	MINIMUM
NO.	NUMBER
NR	NOT RATED
OVHG	OVERHANG
PR	PAIR
SMS	SHEET METAL SCREW

LEGEND

MAIN RUNNER
CROSS RUNNER — T BAR CEILING

INDICATED FIXED SIDE

INDICATED FREE SIDE

SPLAY WIRE - 4 WAY

2'x4' RECESSED LIGHT FIXTURE

SUPPLY AIR DIFFUSER

APPROVALS

LICENSED ARCHITECT
MICHAEL D. STARR
No. C16656
PROFESSIONAL DATE 7/1/98
STATE OF CALIFORNIA

PACESETTER INDUSTRIES, INC.
P.O. BOX 1151, MODESTO, CA 95353 (209) 521-1600

24x40 RELOCATABLE BUILDING

SHEET CONTENTS:
REFLECTED CEILING PLAN
ALT. REFLECTED CEILING PLAN
GENERAL NOTES
LEGEND
DETAILS

DATE:		APRIL 28, 1997
REV. #1	△1	MAY 15, 1997
REV. #2	△2	JUNE 20, 1997
REV. #3	△3	AUGUST 1, 1997
REV. #4	△4	AUGUST 26, 1997
REV. #7	△7	12-7-97
DRAWING SCALE:		AS SHOWN
PROJECT NUMBER:		97-05

SHEET A4 OF