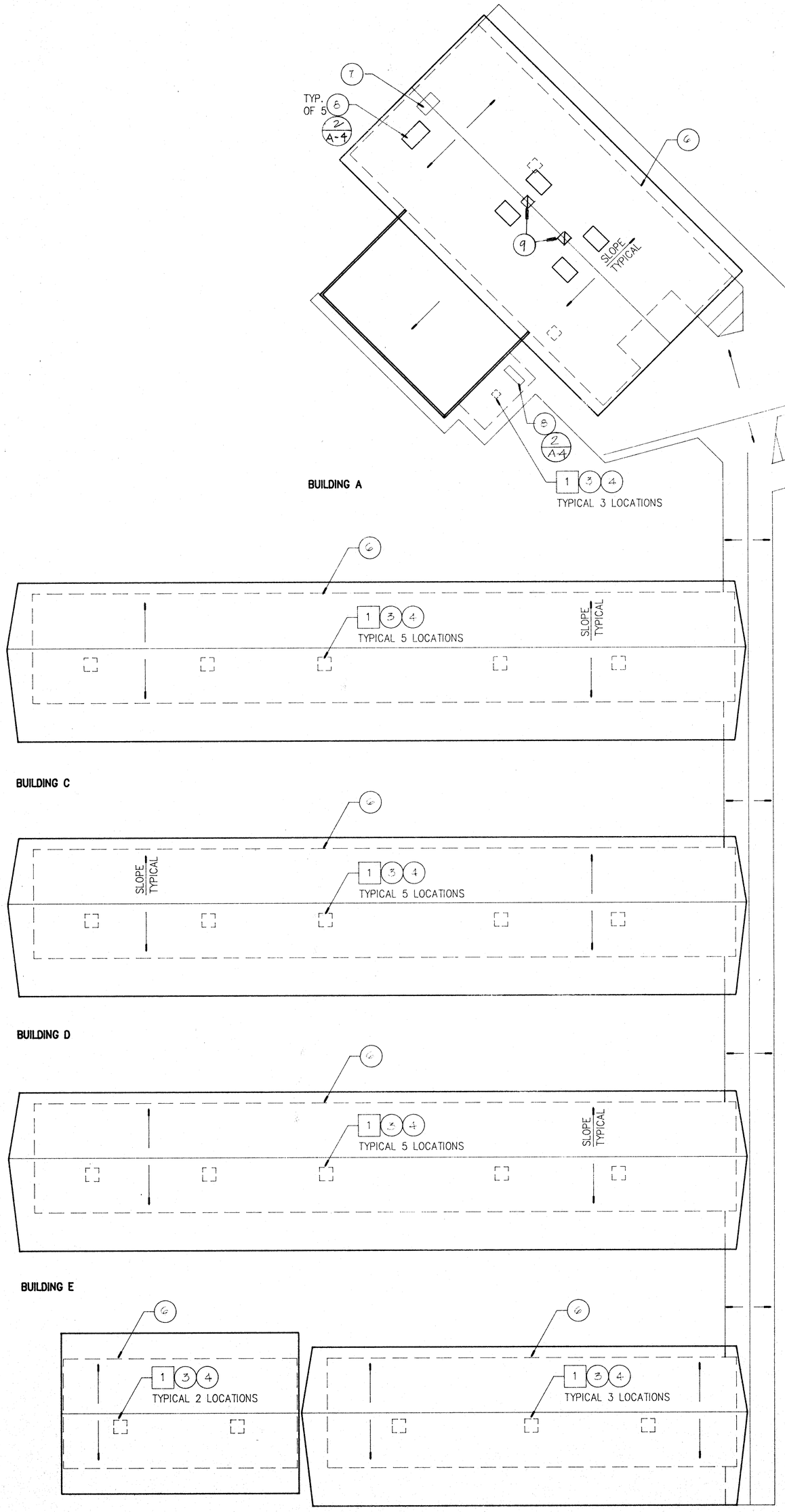

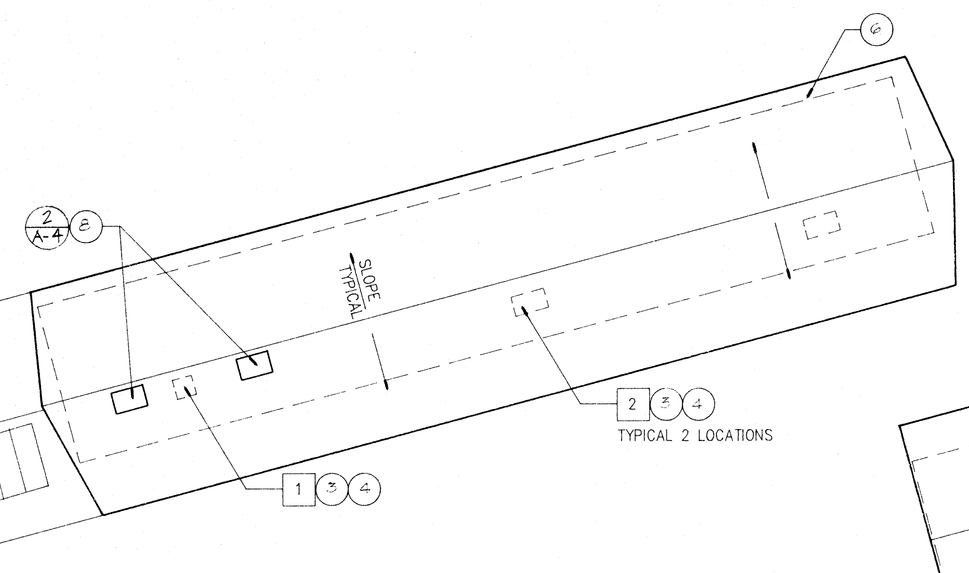

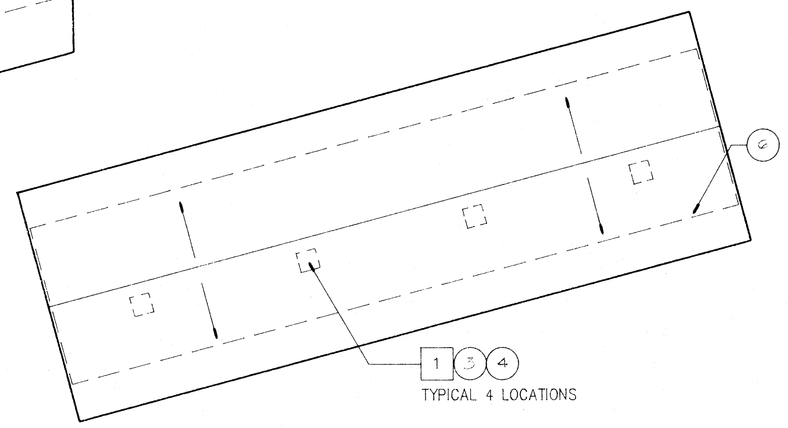

DEMOLITION ROOF PLAN NOTES

1. REMOVE EXISTING ROOF MOUNTED EVAPORATIVE COOLER.
2. REMOVE EXISTING ROOF MOUNTED DUAL PACK AIR CONDITIONING UNIT.

ROOF PLAN NOTES

3. CAP DUCT PENETRATION THROUGH ROOF WITH AN INSULATED GALVANIZED SHEETMETAL COVER. PAINT COVER TO MATCH ROOFING COLOR. REFER TO MECHANICAL DRAWINGS C/M-7
4. REPAIR AND PATCH ROOFING AT ROOF DUCTING, PLUMBING, AND ELECTRICAL PENETRATIONS TO PROVIDE A WATER TIGHT INSTALLATION.
5. EXISTING ATTIC VENT TO REMAIN
6. DASHED LINE INDICATES LINE OF BUILDING WALL BELOW.
7. EXISTING SMOKE VENT TO REMAIN.
8. REMOVE AND INSTALL HEATING AND COOLING UNIT (REFER TO MECHANICAL DRAWINGS) SEE DETAIL 1/A-13
9. EXHAUST FAN (REFER TO MECH) SEE 2/A-13

CONTRACTOR MUST TAKE EXTRA PRECAUTIONS TO AVOID DAMAGE TO THE EXISTING ROOFING.

REFER TO MECHANICAL DRAWINGS FOR EXHAUST FAN LOCATIONS AND ROOF JACK PENETRATIONS.

REFER TO MECHANICAL AND ELECTRICAL DRAWINGS FOR ADDITIONAL REQUIREMENTS.

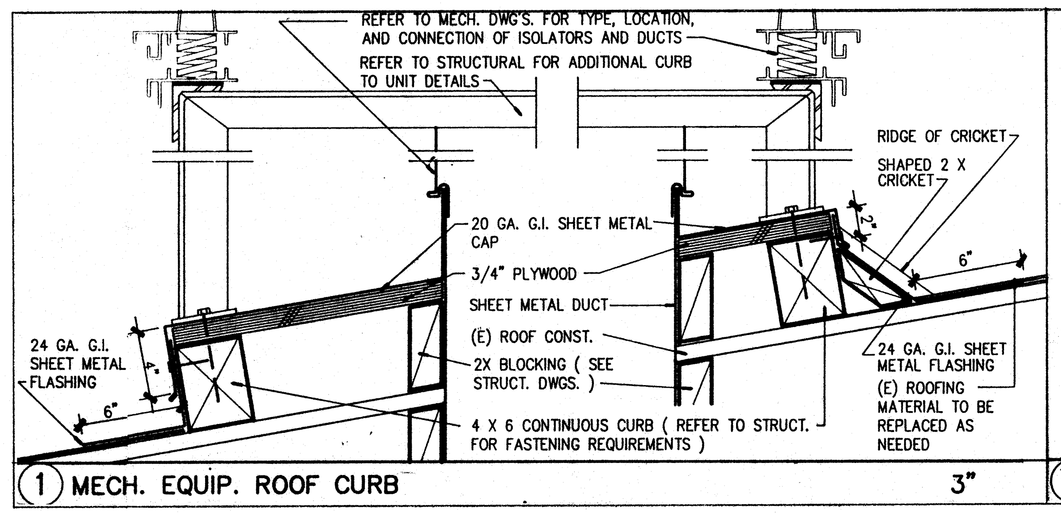

1 MECH. EQUIP. ROOF CURB 3"

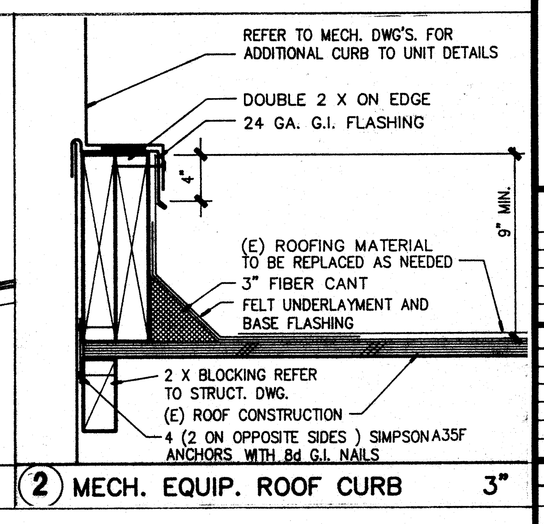

2 MECH. EQUIP. ROOF CURB 3"

IDENTIFICATION STAMP
Department of General Services
Office of the State Architect
DEC 1 3 1989
Structural Safety Section
Log # A5 1550 4 NP/LA

N

ROOF PLANS

1/16"

RRA
Architecture
Planning
Interior Design
Space Planning

Donald W. Renfro AIA	C5283
Mark E. Russell AIA	C13726
Carl G. Elliott AIA	C7571
K. Bartram Huffman AIA	C12061
Kenneth A. Kalla AIA	C17760
Jeffrey P. Krausse AIA	C16834
Tommy W. Preston AIA	C12263
Larry G. Wiggins AIA	C12514

Renfro-Russell & Associates. Inc.
4800 Stockdale Highway, Suite 304, Bakersfield, California 93309 (805) 327-7075

CONSULTANTS

PROJECT

BAKERSFIELD CITY SCHOOL DISTRICT

FREMONT ELEMENTARY SCHOOL MODERNIZATION

THE ABOVE DRAWINGS AND SPECIFICATIONS AND IDEAS, DESIGNS AND ARRANGEMENTS REPRESENTED THEREBY ARE AND SHALL REMAIN THE PROPERTY OF THE ARCHITECT AND NO PART THEREOF SHALL BE COPIED, DISCLOSED TO OTHERS OR USED IN CONNECTION WITH ANY WORK OR PROJECT OTHER THAN THE SPECIFIC PROJECT FOR WHICH THEY HAVE BEEN PREPARED AND DEVELOPED WITHOUT THE WRITTEN CONSENT OF THE ARCHITECT. VISUAL CONTACT WITH THESE DRAWINGS OR SPECIFICATIONS SHALL CONSTITUTE CONCLUSIVE EVIDENCE OF ACCEPTANCE OF THESE RESTRICTIONS.

WRITTEN DIMENSIONS ON THESE DRAWINGS SHALL HAVE PRECEDENCE OVER SCALED DIMENSION. CONTRACTORS SHALL VERIFY AND BE RESPONSIBLE FOR ALL DIMENSIONS AND CONDITIONS ON THE JOB AND THIS OFFICE MUST BE NOTIFIED OF ANY VARIATIONS FROM THE DIMENSIONS AND CONDITIONS SHOWN BY THESE DRAWINGS. SHOP DETAILS MUST BE SUBMITTED TO THIS OFFICE FOR APPROVAL BEFORE PROCEEDING WITH FABRICATION.

KEY PLAN

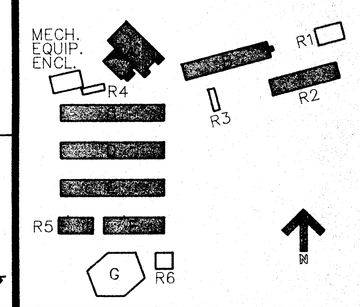

BAKERSFIELD CITY SCHOOL DISTRICT
BOARD OF EDUCATION

DATE	APPROVED

DATE	ISSUED FOR
9-3-91	BIDDING

DATE	REVISIONS

SHEET TITLE

ROOF PLANS

APPROVED/ARCHITECT Tommy W. Preston
CHECKED TWP DATE 8-1-89
DRAWN BY ES,RSS PROJECT NO. 86-216FM

SHEET NUMBER 86216CA42A192

A-13

OF 19 SHEETS